RoboCup2004
Rescue Robot League Competition
Lisbon, Portugal
June 27 – July 5, 2004
www.robocup2004.pt

RoboCupRescue - Robot League Team UMRS-V, Japan

Toshi Takamori[1], Shigeru Kobayashi[2]

[1] Kobe University
1, Rokkodai, Nada, Kobe, Hyogo, 657-8501 Japan
takamori@r.cs.kobe-u.ac.jp
http://www.r.cs.kobe-u.ac.jp/umrs/

[2] Kobe City College of Technology,
8-3, Gakuenhigashi, Nishi, Kobe, Hyogo, 651-2194 Japan
kobayash@kobe-kosen.ac.jp

Abstract. This paper shows the outline of our team and the search system with the series of robots named UMRS-V that will participate in the RoboCup Rescue Robot league tournaments. Our team consists of seven members. And we are going to operate one parent robot and two child search robots by two operators. The detail of the robots, the communication system, the control system, the human interface, the sensor systems of this group of robots currently preparing to set-up for this competition are described.

Introduction

At RoboCup 2002 Fukuoka, our team named UVS-IV participated in Rescue Robot league tournaments. Actually UVS-IV is the name of robot series. This time we have UMRS-Vseries that are the successor of UVS-IV, we use this robots' name as the team name again. UMRS is Utility Mobile Robot for Search. Currently model is fifth generation of UMRS, so we call UMRS-V, and now 5 variety of crawler-type UMRS-V are used and one as a parent robot of other UMRS-Vs is under construction for further development and the study.
Table 1 and Table 2 show the specifications and the basic surmount characteristics of each robot respectively. About the size of a rescue robot, it is depend on the search space. The smaller its size is, the narrower space a robot can enter. On the other hand, a robot must have enough size to mount the obstacles according their size. The size of UMRS is decided based on the information from the rescuers of Kobe City Fire Station. They said, in the rescue operation in debris, they had many chances find spaces where they could crawl forward even those spaces were usually not stable. Then UMRS has the body size up to an upper body of an adult human, in another words, the frontal projection section of it is up to that of a crawling adult human body, the height of the it is correspond to the thickness of his breast, the wide of it is correspond to the width of his shoulder, and the length is up to seating height of his body.

Table 1. Major Specifications of Crawler-type UMRS-V

Robot	Dimension (mm)	Weight (kg)	Num. of Motor	Appearance
UMRS-V-M1	582x500x176	21.4	4	Photo1
UMRS-V-M2	558x340x163	20.3	3	Photo2
UMRS-V-M3	530x345x180	18	8	Photo3
UMRS-V-S1	300x250x100	9	4	Photo4
UMRS-V-S2	510x470x210	20	4	Photo5

Table 2. Surmount Performance of Crawler-Type Robots

Obstacle / UMRS-V-*	M1	M2	M3	S1	S2
Max. Slope climb angle (deg)	30	30	20	20	30
Max. Surmount step height (mm)	160	200	125	150	200
Max. Traverse gap width (mm)	310	390	150	150	250

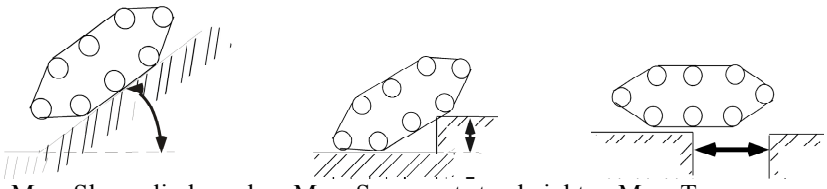

Max. Slope climb angle Max. Surmount step height Max. Traverse gap width

About the mechanisms of UMRS, All UMRS have crawler that is superior to run over a rough terrain. Even basic crawler-type robots have a limitation to overcome the obstacle because the center of gravity has to be on that obstacle to climb. To improve the ability of surmounting obstacles, various kinds of special design were added to a basic crawler-type robot. The features of each robot is as follows,

UMRS-V-M1 (Photo 1): has an auxiliary crawler, with this as an arm, robot can climb and descend the obstacle easily, and body is robust and reversible.

UMRS-V-M2 (Photo 2): has a mechanism that the position of the center of gravity can be changed and controlled to improve the ability of surmounting obstacles.

UMRS-V-M3 (Photo 3): has 4 triangle-shape independent-driven crawlers and these triangles rotate at the time of running on a rough terrain.

UMRS-V-S1 (Photo 4): is compact and. lightweight, even the ability of obstacle surmounting is limited, but this can easily get into the narrow space.

UMRS-V-S2 (Photo 5): has auxiliary crawler that is almost same size and shape of its main body. Using these two sets of crawlers corporately, the height of camera can be changed.

UMRS-V-Parent (Fig. 1): is the parent robot for other UMRS-V and can bring two other UMRS-Vs, now under construction.

Up to now we have the plan to use 3 units out of 6 units UMRS-V because the shipping cost to Portugal of those robots is an enormous amount.

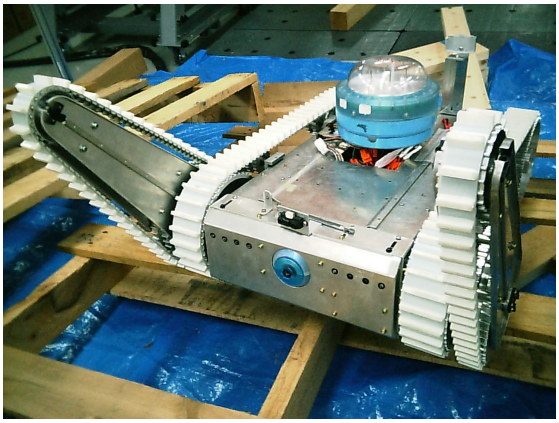

Photo 1 UMRS-V-M1

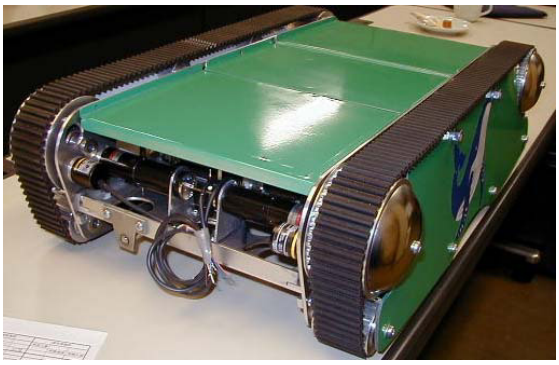

Photo 2 UMRS-V-M2

Photo 3 UMRS-V-M3

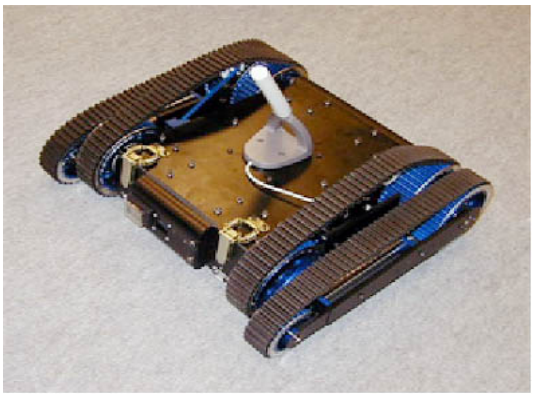

Photo 4 UMRS-V-S1

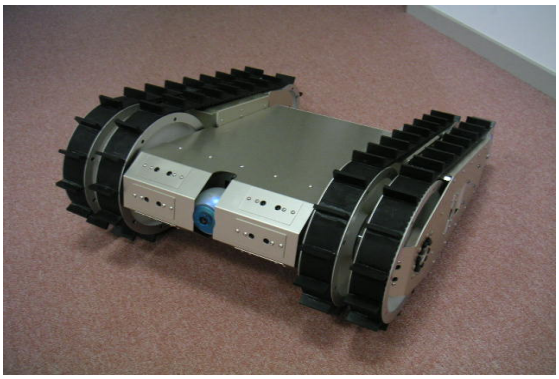

Photo 5 UMRS-V-S2

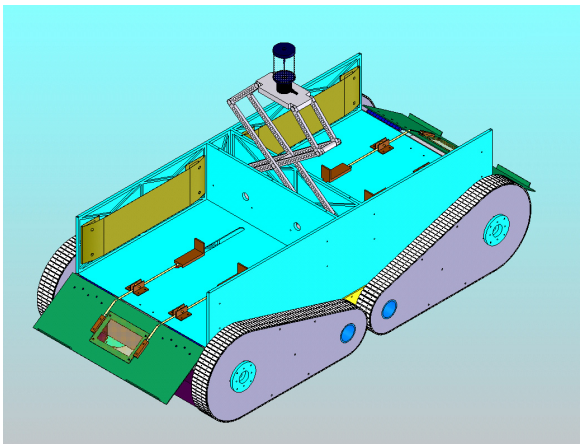

Fig.1 UMRS-V-Parent (Under construction)

1. Team Members and Their Contributions

The team members and their technical contributions are follows,

- Toshi Takamori Team leader
- Shigeru Kobayashi System design and backup operator
- Yasuharu Shimodoi Architecture design
- Shiro Muramoto Mechanical design
- Shigetoshi Nakamura Mechanical design
- Shiro Takashima Operator
- Hideo Fukumoto Operator

2. Operator Station Set-up and Break-Down (10 minutes)

We are going to operate three robots by two operators as mentioned in section 1.
As main three parsons of our team already had participated with USV-IV in RoboCup Rescue, Robot league, Fukuoka 2002, Based on these experiences, the successor UMRS-V machines and control system have been design and tuned for these series of quick preparation and withdrawal work. Also careful preparation and actual trainings will be done by using in Experimental Disaster Site at Kobe Laboratory IRS and RoboCup Japan Open, and will be continued until just before the competition start for this RoboCup 2004. This training of quick set-up and break-down are also useful for preparing for works in Real Disaster Site.
As you recommended, the transportation container boxes of robots and necessary devices are considered to be converted to the chairs or operation desks and easy to move and handle.
Our procedure to set-up and break-down the operation station is follows,

Set-up (less than 10 minutes)
Just before the team change period, All member of our team carry robots and necessary apparatuses to permitted area near of operation station, this work will be done cooperatively and each parson has take in charge of his work.

At 10 minutes change period, each member bring robots and necessary apparatuses into operation station, and connect cables as previously set. After that just two operator will make a final set-up to start the robots.

Break-down (less than 10 minutes)
As within first 2 minutes, one operator have to taking care of map generation and printing, another operator will make procedure to shut down the system and other team member will help to bring out all the robots and other necessary materials from permitted time and places.

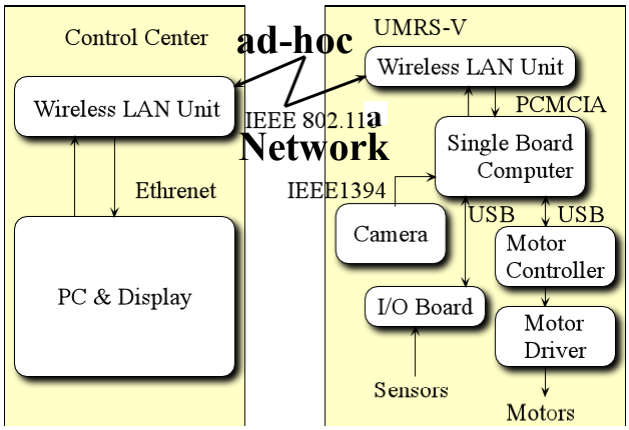

Fig.2 Communication and Control system of UMRS-V

3. Communications

UMRS has control and communication systems as shown in Fig. 2, and each robot have NiMH batteries as an energy source, and duration time of search is at least 1 hour.

The communication between the operation station and each (child) is made by 802.11A (5GHz) wireless LANs. An ad-hoc network system is hired to keep good communication condition and avoid driving robots out of control. An operator can communicate with the robots that locate even behind the direct wireless communication range because each robots can relay the signal. Also each robot has a safety system that the robot stays same position at the time the robot cannot communicate with other robots. Just the communication between the parent robot and the operation station will be made by wired LAN(passive tether) to keep the sure communication.

4. Control Method and Human-Robot Interface

As shown in Fig.2, operators type keyboards to command the host computer in an operation room then this host computer interpret their commands to more concrete commands and send them to local single board computer in each robot. This on-board computer is operated by Linux OS and connected to and communicates with sensors and motor-drivers by USB interface. To obtain noiseless clear pictures of the search area, the images taken by on-board video camera are transmitted to the on-board computer by IEEE1394 interface, then transmitted to the host computer by a wireless LAN. The tiny-size motor drivers controlled by the motor controller are connected to electric DC motors. A display of the host computer indicates the operator the current condition of each robot and systems along with the views of the robots' on board video camera.

The operator uses this interface to drive a group of robot deep in debris, and find and identify the position of sufferer. The necessary information at this time is views of a robot video camera, 2 dimensional and/or 3 dimensional bird's-eye-view map, the position and condition of UMRS-V, the estimate position of a sufferer, the areas already searched. This information must be displayed in real-time for immediate utilization for decision making and setting up a next strategy. The sample of a display for a robot operation is shown in Fig 3. The right window of this display is 2-D and bird's-eye -view-like map. The operator steers UMRS by the information of the video camera's view and sensors' information located right down side of this display.

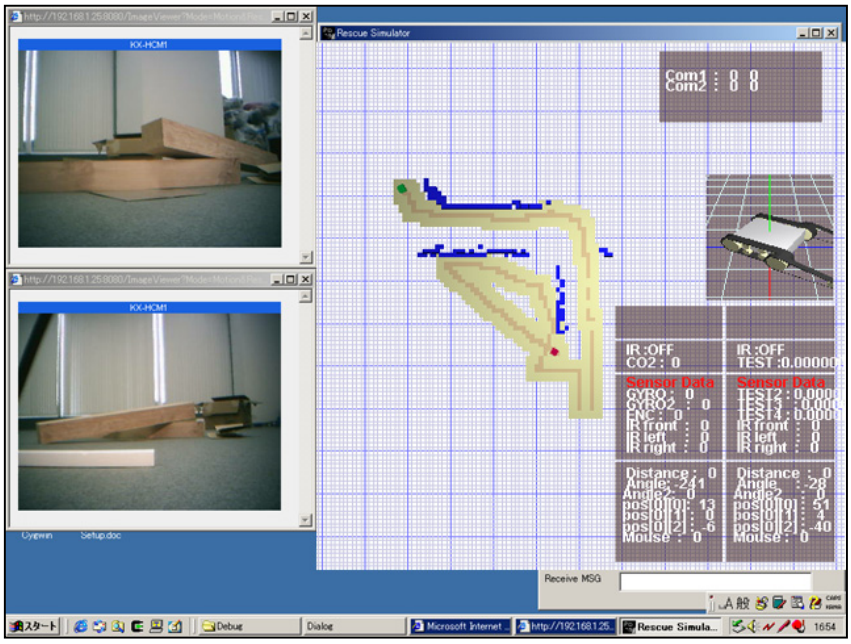

Fig.3 Example of Control display

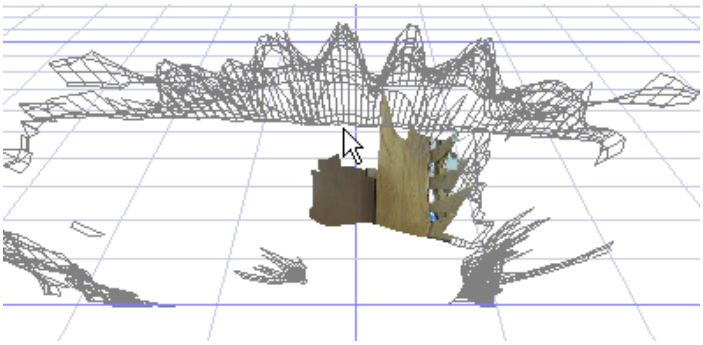

Fig.4 A Process to generate 3D Map

Fig.5 Example of 2 D Map generation

5. Map generation/printing

The generated map is used to clarify the condition in debris and confirm which part is safe for a human rescue party to enter, and guide them to reach the targets after the robot finds victims. We have already one system to create 2D map, and 3D map generation method with IR range finder is currently developed.

The 2D environment map is generated based on sensing information to clarify the environment of search area and define the search route of each robot. The encoders and motion sensors are used to identify the robot position by a dead reckoning method. And IR obstacle detection sensors attached the surface on the robot search the obstacle around. Fig.5 is the example of the monitor view with the 2-dimensional map. The right side of view indicates automatically generated easy-to-read map. This map shows there are obstacles in blue area and robot cannot go through, and robot can pass the yellow area with current robots positions. The left side displays camera views from robots and sensors' outputs. The operator also can electrically paste identification icon like "desk", "slope" "possible human existence" etc. manually by using these monitoring information.

Another map currently we develop is 3-D one. It is necessary to gather information about 3D shapes of objects in debris, then the dangerous places can be identified more easily. The information display system with high virtual reality as if an observer was in that search place is very effective. It is preferable to show this information sequentially, but not required to display in real time. Then various kinds of information are embedded to the screen of display on a base of 3D environmental map. Pasting up the pictures taken by an on-board camera on the frame of distance picture taken by an IR range finder generates 3D images, the base of the environment map.

The range finder of commerce can measure and pan only in the half plain, Then the panoramic head was made and added to this range finder to be able to tilt and measure 3 dimensionally, then we can get 3D distance pictures. This panoramic head can move 90 degrees; currently it takes 10 seconds to take pictures by one round and the software is reviewed to shorten the time of this measurement. As the data taken here is distance vector of each measured point. More than 3 points measurement generates a small plain A 3D picture is produced by pasting up the texture extracted from the pictures of on-board camera on this small plain in accordance with the position as shown in Fig.4.

6. Sensors for Navigation and Localization

The video camera is the most important sensor and used for both driving and human-search purpose. Each UMRS-V has the self-position and posture recognition sensors The on–board encoder and gyroscope measure the running distance and the orientation of UMRS locally, and the dead reckoning method is used to determine the position. The gyroscope is 3-dimentional motion sensor, MDP-A3U7 of NEC Tokin, Japan. It has 3 axis ceramic gyroscopes, 2 axis acceleration sensors and 2 axis geometric sensors, and can calculate and output the 3 directional orientation angles. Also IR distance measurement sensors are used to detect obstacles around robots.
The system with IR range finder and distance measurement sensor is currently developed.

7. Sensors for Victim Identification

Other than the video camera, UMRS-V have a CO_2 sensor and a pyroelectric IR sensor as a direct human detection sensor.
CO_2 sensor is TGS4161 of Figaro Engineering Inc, Japan, it can detect density change of CO_2, so we can use this sensor to make estimation whether there is a sufferer in the closed room or not, also can check the breathing at very near of victim's mouth.
The shutter is added to the IR sensor on the market to use for human detection. This pyroelectric IR sensor can track the human in motion by sensing the variation of temperature, but cannot recognize the human in rest. The detection distance is are 12m and the detection angle of this sensor is 5degree.
A microphones and a speaker is planned to install to communicate with a sufferer who is still conscious.

8. Robot Locomotion

All UMRS-V are crawler type robots as mentioned in the section of Introduction and droved by DC motors. The number of this DC motors in each robots is shown in Table 1. As shown in Photo 1 to 5, some robot has auxiliary crawler and/or the center of gravity moving mechanism to increase the ability of surmounting obstacles as shown in Table 2. The tiny-size motor drivers controlled by the motor controller are connected to electric DC motors. With exception of UMRS-V-S1, DC motors used in UMRS-V-M and S model are 20 W. UMRS-Parent has DC blushless motors. The duration time of running is at least one hour. Each robot have NiMH batteries as an energy source, and duration time of search is at least 1 hour.

9. Other Mechanisms

A mechanism to run on rough train is introduced in Introduction, other than this basic feature like auxiliary crawlers, some of UMRS-V have another one.
UMRS-V-M2 (Photo 2) has a mechanism that the position of the center of gravity can be changed and controlled to improve the ability of surmounting obstacles by moving weight in the robot. The drawings of UMRS-V-M2 with this mechanism are shows in Fig. 6.
Other special feature is the pantograph mechanism in UMRS-V-Parent as shown in Fig. 1, the camera especially an omni direction camera is installed on this and this one is retracted at the time of Robot driving, and expanded when high position of the camera is necessary for observation.

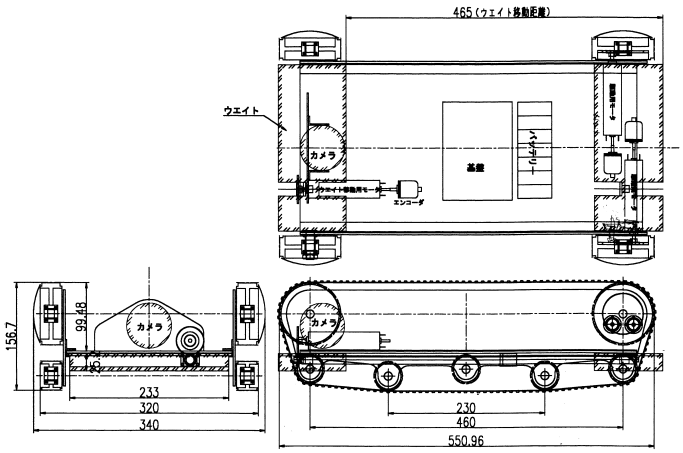

Fig.6 Drawings of UMRS-V-M2 with Weight Moving Mechanism to change the position of Robot's Center of Gravity

10. Team Training for Operation (Human Factors)

Our final target is to manipulate these group of robots by the man-machine control system, in another word, the robots work automatically, at the area robot is superior than operator, based on previously fixed routine like route finding by sensors and map information, and the operator directly manipulates robot at the time the robot cannot decide what to do and/or need help. Basically the operator is just required to type the keyboard of PC along with the graphical information of PC Display. But currently the operating experiences in variety conditions are essentials to handle this series of robots. It is difficult for the novice to operate these robot just with a view of on-board video camera and sensor information by a remote control .
Also careful preparation and on site trainings are scheduled to be done by using Experimental Disaster Site at Kobe Laboratory IRS and the experimental site of RoboCup Rescue Japan Open, and will be continued until just before the competition start for this RoboCup 2004.

11. Possibility for Practical Application to Real Disaster Site

Our final target of our study is to use our rescue robot in actual disaster site. So based on the experience in Kobe Laboratory IRS, the robots and their system are tried to be continuously improved. Among the UMRS-V series, not only the basic stiffness of the body and the obstacle surmount performances but also a water resistance and Anti sparkling performances are improved to make the robot more robust with the environment.
Another approach to make our sufferer searching system more useful is to get the ability of the indirect search of sufferers' cellphone[3)]. The round device on the top of UMRS-V-M1 in Photo 1 is the antenna to detect the the direction of radio waves of sufferers' cellphone.

12. System Cost

The material costs excluding control and communication devices, of each UMRS-V-M series and S series is around 5 thousand EUR. And the cost of control and communication parts of each UMRS-V-M series and S series is around 5 thousand EUR. SO the total estimate cost of each UMRS-V-M series and S series is around 10 thousand EUR, this is not including machining and personnel costs. More accurate cost will be calculated at the time of publishing.

References

1. T. Takamori et al, “Development of sufferer searching system by mobile robots”, Report of study group on Development of Rescue robots in huge disaster RS150”(in Japanese), Japanese Society of Mechanical. Engineering,(1999) 149-196.
2. S. Kobayashi, T. Takamori, “A human body search system by a man-machine controlled group of robots in a rescue operation”, Cutting Edge of Robotics in Japan 2002 (Disaster Response Robots), Advanced Robotics Vol. 16 No.6 (2002) 525-528
3. T. Takamori et al, “Development of UMRS (Utility Mobile Robot for Search) and Serching System for Sufferers with Cellphone”, Proceedings of 1st International Symposium on System & Human Science -For Safety, Security, and Dependability (2003) 47-52
4. A. Ikeuchi, T. Takamori, S. Kobayashi et al. “Development of Mobile Robots for Search and Rescue Operation Systems” The 4th International Conference on Field and Service Robotics (2003) 321-326
5. Shigeru Kobayashi, Toshi Takamori, Masayuki Takashima, Akihiko Ikeuchi, Shiro Takashima, Hideo Fukumoto, “Utility mobile robots forsearch and their monitoring system for rescue operation”, International Symposium on Robotics (2004)