RoboCup – US Open 2005
Rescue Robot League Competition
Atlanta, Georgia, USA
May 7 – 10, 2005
www.robocup-us.org

RoboCupRescue - Robot League Team Nejnemi (Mexico)

Marco Fernández, Luis J. Carballo, J. Alejandro Llera, Roberto Solís, Elda Villanueva, Andrei Viesca

Universidad Panamericana
Augusto Rodin 498, Insurgentes Mixcoac, 03920
Mexico City, Mexico
http://www.upmx.mx
nejnemi@yahoo.com.mx
agonzah@mx.up.mx

Abstract. The goal of these papers is to describe Nejnemi: our project for this competition. Nejnemi is a semi-autonomous robot designed to explore and traverse difficult environments helping with rescue operations. This document summarizes our robot's operation, its locomotion and communications as well as some mechanical aspects, control methods and the use of specialized sensors incorporated in Nejnemi. One of our project's goals has been to produce an inexpensive but efficient robot as reflected in these papers.

Introduction

Mankind has reached a very high level of technology which allows us to design new autonomous and semi-autonomous systems focused on improving our way of life. Nowadays there are many types of robotic systems that, having been carefully programmed, are able to execute precise tasks in the manufacturing industry, in urban and rural environments. In many cases these systems carry out tasks that may otherwise put human lives in danger.

It is important to notice the important roles many robots carry out in order to protect people and guarantee their safety. These robots have stopped being mere commercial applications to become efficient and precise tools that may be used in case of a disaster to explore an area without the risks involved with sending people in, due to their very low value compared to the irreplaceable state of a human person.

In order to handle robots in these situations much developing has taken place producing: vision systems, ultrasonic mapping techniques and pinpointing methods that allow the robot to interact with its environment so that it can identify and locate victims inside a disaster area. In addition, the time of response a robot takes to react to possible mishaps or its ability to dodge an evade obstacles can determine how useful it can be for rescue tasks.

But providing a robot with these abilities considerably raises the fabrication costs therefore making the process risky or very difficult in order to assemble and deploy it. This is why it is of great importance to take into consideration an optimal use of resources when designing a system so that manufacturing costs may be reduced and a simple design may be achieved.

The robot described in this papers meets the above requirements. Nejnemi, having a simple design, is able to identify and effectively locate a fallen victim.

1. Team Members and Their Contributions

- Marco Eli Fernández Félix — Team's captain
- Luis Javier Carballo Ontiveros — Mechanical design
- Roberto Solís Capote — Research and manufacturing
- Elda Sara Villanueva Pérez — Sponsors and administration
- Jorge Alejandro Llera Peralta — Electronics and control
- Andrei Viesca Novack — Software and communications
- Alejandro González Hernández — Advisor

2. Operator Station Set-up and Break-Down(7 min)

When fast response times are critical in a life saving process we must have an accurate system that can provide trustworthy support to operators.

Our system consists of only two laptops that must be turned on before the robot can be used and operated through our simple control interface.

3. Communications

We will be using two laptops equipped with 802.11a Wireless Network Cards with power of 50mW. One will be used by the operator who will monitor and control all the functions of the robot. The second laptop will be the robot's "brain" performing all local processing to ensure there are no problems with the information received from sensors or the information sent to the operator's laptop. Both laptops will be connected using a peer-to-peer fashion over an encrypted communications channel using a 128 bit WEP key. We will use .NET technology in our robot due to the support that it provides in regard to security, efficiency and compatibility.

4. Control Method and Human-Robot Interface

Nejnemi is controlled by only one remote operator through a wireless link. The robot may be considered semi-teleoperated because special functions such as generating a map will be totally automatic.

We will be using a client-server architecture to communicate with and control Nejnemi. The visual interface will have the ability to show the output of two cameras mounted on the robot; the interface will also have a compass visualizer to check the current alignment of the robot.

Controlling the robot will require the use of a Joypad which will provide the operator with an improved level of sensitivity as compared to that obtained with a keyboard. This will allow a more natural method to control the extending arm. But in case of a Joypad malfunction the ancillary keyboard may still be used.

In addition to navigation controls, the interface will be showing the current local map generated by an ultrasonic radar. At present our aim is to manually control the robot; thus we have provided a reliable interface in order to attain easy navigation control, and reduce training time.

Because our system uses two laptops, it is possible to distribute the workload between them, leaving the map generating function to the client computer which will be mounted on the robot, while the server computer will be the source of commands sent to the robot from the operator. The purpose of having a server computer is to have a means of logging all information received from the robot, so that in case of losing the robot, data analysis of the situation may be carried out.

Our computer interface will be developed using C# and Visual Basic .NET . This decision allows to produce quick and efficient code that may be easily managed or scaled in case of having new needs.

5. Map generation/printing

We plan to create the map using our ultrasonic equipment to sense the environment. We will be creating “local” maps based on the radar. After that, a “global” map will be constructed in order to get the general idea of the surroundings.

A map will be generated based on the measurements that are made, making it possible to calculate the robot’s position. Certain special conditions will be avoided such as mapping very small or low objects, such as small size debris (for example, bricks and small rocks).

Both the global and local maps will be drawn on top of a grid in order to maintain reference points to accomplish accurate victim locating, and allowing the operator to have an idea of the robot’s position.

Another mapping technique creates lines that represent the robot’s path. These lines are obviously scaled to fit the computer screen, and they are calculated using input from the encoders and a compass.

6. Sensors for Navigation and Localization

Information will be conveyed to the operator by means of two cameras. In addition, an analog compass will be used to reckon the orientation of the robot through the emission of sine waves. Also an ultrasonic radar will be used which will enable the robot to measure the distance from the robot to the nearest object, which is helpful in the mapping. Furthermore, the locomotion motors will have built in encoders in order to compute the distance traveled by the robot with some precision.

The signals coming from the compass, the radar and the encoders will be interpreted and processed directly on the client computer, since the latter will process the mapping in the arenas.

7. Sensors for Victim Identification

The operator will be aided in the victim recognition, mainly by the cameras mounted on the robot.

It is also possible to use a microphone connected to a vumeter in order to measure the sound dB's coming from the manikin. The operator will nonetheless monitor the sound in order to avoid an incorrect perception.

Temperature of the manikin will be registered by means of a non-contact temperature sensor. We are still studying various possibilities for measuring the level of CO2.

8. Robot Locomotion

Locomotion of Nejnemi is mainly achieved by a continuous tank-type track system which provides optimum stability.

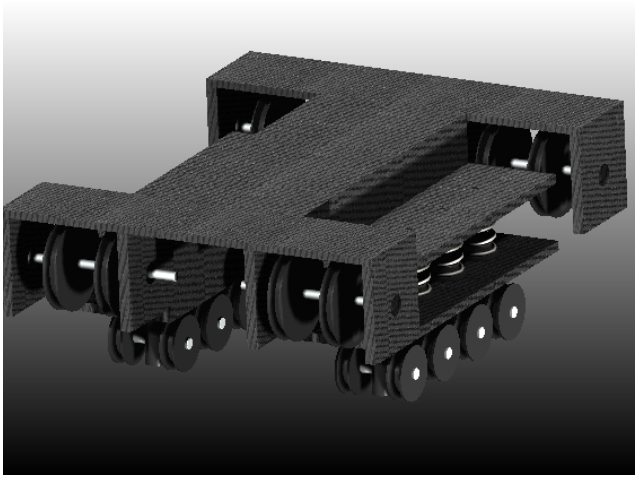

Fig. 1. 3D model of the complete tracks base

Structure

The structure which supports the tracks consists of three independent parts, made in a carbon fiber, epoxy resin and plywood composite. The plywood panels make up the main structural array, and are covered with a bidirectional mesh of continuous carbon fiber, in an epoxy resin matrix (Epolam 2015).

Fig. 2. Picture of the tracks' base main body.

This material combines good tenacity and lightweight. It was chosen owing to its ease of use in forming complicated shapes with thin elements under high stresses.

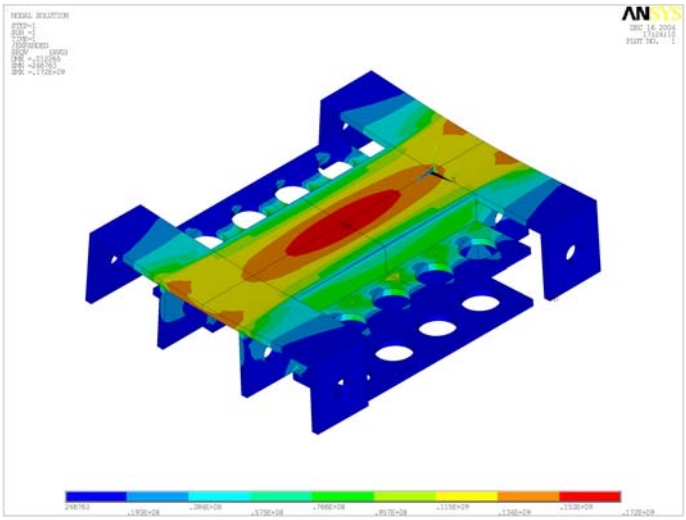

Fig. 3. Finite element simulation of the tracks base

The above mentioned parts are two flanks which provide support to the tracks, and a center base carrying the suspension system. The flanks and the base are united through a structure of aluminum square cross-sectional hollow beams. This structure located in the upper position serves the purpose of protecting the computer and the electric and electronic hardware.

Suspensión system

The suspension is formed by sixteen idle pulleys, eight distributed along each track. Their main function is to provide support and damping between the carbon-fiber structure and the track.

Each idle pulley is made up of two symmetric wheels , made in nylamid, and is joined to a sliding vertical rod at each of whose ends a flange is attached . These flanges house a helical spring.

The suspension is prepared to absorb any vertical shock to which the robot might be subjected due to falling from a 2 meter height. The shock absorption provides protection to the robot and its components in case it travels on fragile structures that might collapse. Likewise it is helpful in preserving data in case of an accident.

Fig. 4. A sight of the suspensión system

Locomotion system

The locomotion system is formed by two independent motors which, by means of the pulley-track system converts torque into linear forces. Each T22NRHJ-LNN-NS-00 (see fig. 5) Pacific Scientific stepper motor used in this robot, when powered at 24 volts provides a torque of up to 120 N cm, turning at a speed of 100 rpm. The resolution is 1.8° per step.

Fig. 5. Pacific Scientific stepper motors.

The diameter difference between the driving and driven pulleys, yield a torque amplification with a consequent speed reduction.

Stepper motors are used for two reasons: a) they are well behaved at low speeds, and b) position can be controlled with a high degree of accuracy without the need of feedback control; for many applications open loop control may suffice.

Locomotion track

It is made of two adjacent belts bonded with a special glue. One of these belts is in contact with the wheels, while the other provides a rugged surface that will be in contact with the terrain.

9. Other Mechanisms

Nejnemi is equipped with a 3 DOF manipulating arm which may carry the camera and sensors to where they are needed, in order to properly describe the victim.
Often, the mobile robot alone will not be able to access the victim at certain points, which will make it difficult to investigate his or her physical condition, without jeopardizing his or her integrity. The robot arm provides a means to reach difficult points.

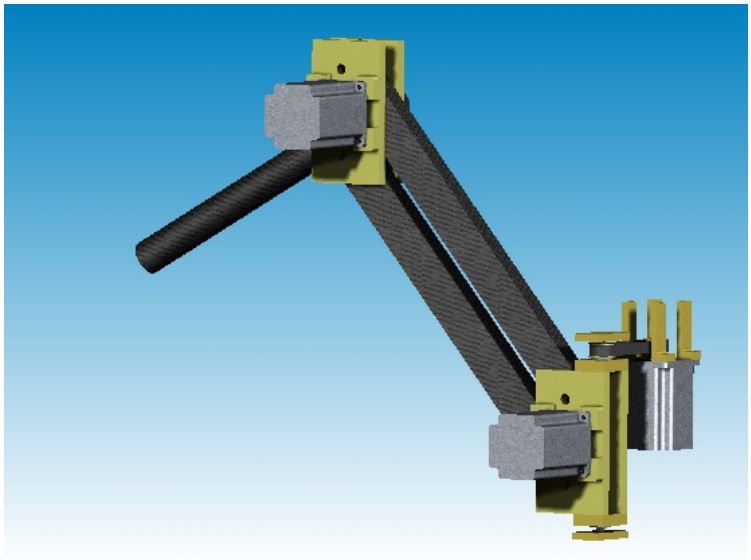

Fig. 6. 3D model of the manipulating arm.

Time will be saved if sensors rather than the whole robot are transported to where they are needed.
Each axis of the RRR kinematic chain will be powered by a T22NRHJ-LNN-NS-00. The configuration of the three axes will be such as to simulate the shoulder and elbow of a human arm. The kinematic chain will make it possible to position a point in the three dimensional space.

10. Team Training for Operation (Human Factors)

It is anticipated that the control user interface will be easy to use since the operator's screen will show the map, the actual views as obtained by the cameras, the orientation of the robot and the signals sent by the identification sensors. It is only required from the operator that he knows how to maneuver the robot, and that he is well acquainted with the interface. We expect that the use of a laptop and a joypad will make it easy for any user to operate Nejnemi.

11. Possibility for Practical Application to Real Disaster Site

Because it is very dangerous for a person to go inside a disaster area it is a great advantage to have a robot to explore an area. In this sense, we know the importance and usability of a robot capable of doing real exploration in a truly hazardous area, this is why we have focused on designing a robot with a robust communications ability. In the near future we will begin development of a completely autonomous system because we have seen the vast use that can be given to such a tool. In the mean time our robot can do rather well when used as a manual explorer to do reconnaissance of an area.

12. System Cost

So far our expenses reach: $1553.05 dollars.

Part	Information	Cost
Stepper Motor Modelo T22NRHJ-LNN-NS-00	Pacific Scientific http://www.danahermotion.com/ http://www.barmex.com.mx/	$ 112
5 Motors		$560
	Tax	$ 84
Taffeta 282 (carbon fiber)	Axson http://www.axson.com.mx/	$ 345.68
Epolam 2015 (resine)	Axson http://www.axson.com.mx/	$ 220.23

Part	Information	Cost
	Tax	$ 66.95
Circuitry		$50.25
	Tax	$ 7.53
Nylamid	Nylamid http://www.nylamid.com.mx/	$ 144.39
	Tax	$ 21.65
Light Duty Belts	Gates http://www.gates.com/	$ 2.58
4 Belts		$ 10.34
Suspension (springs)		$ 3.448
8 springs		$ 29.56
Aluminum lever shaft	La Paloma dfrevolu-ción@lapalomaciademetales.com	$ 2.10
	Tax	$ 0.316
Plywood		$ 10.34
TOTAL		$ 1553.05