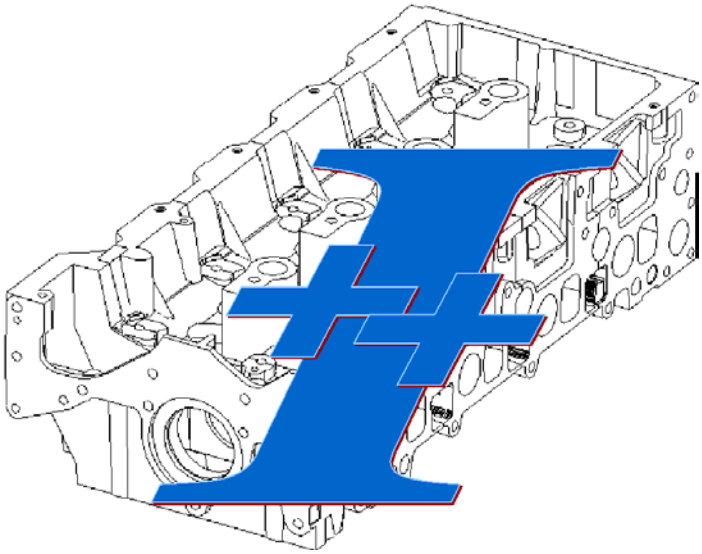

DME – Interface

Release 1.3.9

Contents:

1 I++ WORKING GROUP INFORMATION 8

1.1 This specification was created with the assistance of 8

1.2 The goal 8

1.3 Sub Working group I++ DME Interface (Dimensional Measuring Equipment) 8

1.4 Requirement 8

1.5 What is the intention of the specification ? 8

1.6 Schedule steps 10

1.7 History 10

1.8 Links to important sites 11

2 PHYSICAL SYSTEM LAYOUT 12

2.1 DME-Interface Implementations 13

2.2 DME-Interface Model 13

2.3 Logical System Layout 14

2.4 DME-Interface and Subsystems 15

2.4.1 Application 15
2.4.2 Monitor 15
2.4.3 Diagnostics 15
2.4.4 Info 15

3 HIERARCHY OF COMMUNICATION 17

3.1 Layers 17

3.2 Examples of basic use cases 18

3.2.1 Sequence Diagram: StartSession, EndSession 18
3.2.2 Sequence Diagram: Standard Queue Communication 18
3.2.3 Sequence Diagram: Event, Fast Queue Communication (Multiple Shot Events) ... 19
3.2.4 Sequence Diagram: Handling of Unsolicited Errors 20

4 EVENTS 21

4.1 Transaction events, syntax 21

4.2 One shot events 22

4.3 Multiple shot events 22

4.4 Server events 22

5 OBJECT MODEL 23

5.1 Explanation 23

5.2 Reduced Object Model 24

5.3 Full Object Model 25

5.4 Packaging for visualization 26

5.5 Contents of server 26

5.6 Contents of dme 27

5.7 Contents of cartcmm 28

5.8 Contents of cartcmmwithrotarytable 28

5.9 Contents of toolchanger 29

5.10 Contents of lib and unspecified 30

6 PROTOCOL 31

6.1 Communication 31
6.1.1 Character set 31
6.1.2 Units 31
6.1.3 Enumeration 31
6.1.4 Definitions used in formats 31
6.1.4.1 Production Language 32
6.1.4.2 Syntax 32

6.2 Protocol Basics 35
6.2.1 Tags 35
6.2.2 General line layout 36
6.2.2.1 CommandLine 36
6.2.2.2 ResponseLine 37
6.2.2.3 Definitions 37
6.2.3 Transactions 37
6.2.3.1 Example 38
6.2.4 Events 39
6.2.4.1 Examples 39
6.2.5 Errors 40

6.3 Method Syntax 41
6.3.1 Server Methods 41
6.3.1.1 StartSession() 41
6.3.1.2 EndSession() 41
6.3.1.3 StopDaemon(..) 42
6.3.1.4 StopAllDaemons() 42

6.3.1.5 AbortE() ... 42
6.3.1.6 GetErrorInfo(..) ... 43
6.3.1.7 ClearAllErrors() ... 43
6.3.1.8 Information for handling properties ... 45
6.3.1.9 GetProp(..) ... 45
6.3.1.10 GetPropE(..) ... 45
6.3.1.11 SetProp(..) ... 45
6.3.1.12 EnumProp(..) ... 45
6.3.1.13 EnumAllProp(..) ... 46
6.3.1.14 GetDMEVersion() ... 46
6.3.2 DME Methods ... 48
6.3.2.1 Home() ... 48
6.3.2.2 IsHomed() ... 48
6.3.2.3 EnableUser() ... 48
6.3.2.4 DisableUser() ... 48
6.3.2.5 IsUserEnabled() ... 49
6.3.2.6 OnPtMeasReport(..) ... 49
6.3.2.7 OnMoveReportE(..) ... 49
6.3.2.8 GetMachineClass() ... 50
6.3.2.9 GetErrStatusE() ... 50
6.3.2.10 GetXtdErrStatus() ... 50
6.3.2.11 Get(..) ... 51
6.3.2.12 GoTo(..) ... 51
6.3.2.13 PtMeas(..) ... 52
6.3.2.14 Information for Tool Handling ... 53
6.3.2.15 Tool() ... 54
6.3.2.16 FindTool(..) ... 54
6.3.2.17 FoundTool() ... 54
6.3.2.18 ChangeTool(..) ... 54
6.3.2.19 SetTool(..) ... 54
6.3.2.20 AlignTool(..) ... 55
6.3.2.21 GoToPar() ... 55
6.3.2.22 PtMeasPar() ... 56
6.3.2.23 EnumTools() ... 56
6.3.2.24 Q() ... 56
6.3.2.25 ER() ... 57
6.3.2.26 GetChangeToolAction(..) ... 57
6.3.3 CartCMM Methods ... 58
6.3.3.1 SetCoordSystem(..) ... 59
6.3.3.2 GetCoordSystem() ... 59
6.3.3.3 GetCsyTransformation(..) ... 60
6.3.3.4 SetCsyTransformation(..) ... 60
6.3.3.5 X() ... 61
6.3.3.6 Y() ... 61
6.3.3.7 Z() ... 61
6.3.3.8 IJK() ... 61
6.3.3.9 X(..) ... 61
6.3.3.10 Y(..) ... 62
6.3.3.11 Z(..) ... 62
6.3.3.12 IJK(..) ... 62
6.3.3.13 R() ... 62

6.3.4 ToolChanger Methods ... 64
6.3.5 Tool Methods (Instance of class KTool) ... 64
6.3.5.1 GoToPar() ... 64
6.3.5.2 PtMeasPar() ... 64
6.3.5.3 ReQualify() ... 64
6.3.6 GoToPar Block ... 64
6.3.7 PtMeasPar Block ... 65
6.3.8 A(), B(), C() ... 66
6.3.9 A(..), B(..), C(..) ... 66
6.3.10 Name ... 66
6.3.11 Id ... 66
6.3.12 CollisionVolume ... 67
6.3.13 Alignment ... 70

7 ADDITIONAL DIALOG EXAMPLES ... 71

7.1 StartSession ... 71

7.2 Move 1 axis ... 71

7.3 Probe 1 axis ... 71

7.4 Move more axes in workpiece coordinate system ... 72

7.5 Probe with more axis ... 72

7.6 Set property ... 72

7.7 Get, read property ... 73

7.8 EnumAllProp ... 74

8 ERROR HANDLING ... 75

8.1 Classification of Errors ... 75

8.2 List of I++ predefined errors ... 75

9 MISCELLANEOUS INFORMATION ... 77

9.1 Coordination of company related extensions ... 77

9.2 Initialization of TCP/IP protocol-stack ... 77

9.3 Closing TCP/IP connection ... 77

9.4 EndSession and StartSession ... 77

9.5 Pre-defined Server events ... 77
9.5.1 KeyPress ... 78
9.5.2 Clearance or intermediate point set ... 78
9.5.3 Pick manual point ... 78

9.5.4 Change Tool request ... 78
9.5.5 Set property request ... 78
9.5.6 Additional defined keys ... 78

9.6 Reading part temperature ... 79

10 MULTIPLE ARM SUPPORT ... 80

11 SCANNING ... 81

11.1 Preliminaries ... 81
11.1.1 Hints: ... 81
11.1.2 OnScanReport(..) ... 81

11.2 Scanning known contour ... 82
11.2.1 ScanOnCircleHint(..) ... 82
11.2.2 ScanOnCircle(..) ... 82
11.2.3 ScanOnLineHint(..) ... 83
11.2.4 ScanOnLine(..) ... 83

11.3 Scan unknown contour ... 85
11.3.1 ScanUnknownHint(..) ... 85
11.3.2 ScanInPlaneEndIsSphere(..) ... 85
11.3.3 ScanInPlaneEndIsPlane(..) ... 86
11.3.4 ScanInPlaneEndIsCyl(..) ... 88
11.3.5 ScanInCylEndIsSphere(..) ... 89
11.3.6 ScanInCylEndIsPlane(..) ... 90

11.4 Scanning Examples ... 93
11.4.1 Scanning known contour circle ... 93
11.4.2 Scanning unknown contour ... 93

12 ROTARY TABLE ... 95

12.1 AlignPart(..) ... 95

13 FORMTESTERS ... 96

13.1 CenterPart(..) ... 96

13.2 TiltPart(..) ... 97

13.3 TiltCenterPart(..) ... 97

13.4 LockAxis(..) ... 97

APPENDIX A C++ AND HEADER FILES FOR EXPLANATION ... 99

A.1 \main\main.cpp ... 99

A.2 \server ... 99

A.2.1 \server\server.h 99
A.2.2 \server\part.h 100
A.2.3 \server\server.cpp 100

A.3 \dme 101
A.3.1 \dem\dme.h 101

A.4 \cartcmm 103
A.4.1 \cartcmm\cartcmm.h 103
A.4.2 \cartcmm\eulerw.cpp 104

A.5 \cartcmmwithrottbl 105
A.5.1 \cartcmmwithrottbl\cartcmmwithrottbl.h 105

A.6 \toolchanger 105
A.6.1 \toolchanger\toolchanger.h 105
A.6.2 \toolchanger\tool.h 106
A.6.3 \toolchanger\toolab.h 108
A.6.4 \toolchanger\toolabc.h 108
A.6.5 \toolchanger\gotoparams.h 109
A.6.6 \toolchanger\ptmeaspars.h 109
A.6.7 \toolchanger\param.h 110

A.7 Most important of lib 111
A.7.1 \lib\axis.h 111
A.7.2 \lib\eulerw.h 112
A.7.3 \lib\tag.h 112
A.7.4 \lib\ipptypedef.h 112
A.7.5 \lib\ippbaseclasses.h 113

1 I++ Working Group Information

1.1 This specification was created with the assistance of

Hans-Martin Biedenbach,	AUDI AG
Josef Brunner,	BMW
Kai Gläsner,	DaimlerChrysler
Dr. Günter Moritz,	Messtechnik Wetzlar
Jörg Pfeifle,	DaimlerChrysler
Josef Resch,	Zeiss IMT

I++ is a working group of five European Car manufacturers (Audi, BMW, DaimlerChrysler, VW and Volvo).

1.2 The goal

The I++ working group defined a requirement specification with the goal to achieve a new programming system for inspection devices (not only for CMM's).
This specification will describe the I++ application protocol for the following types of DME's:

- 3D coordinate measuring machines including multiple carriage mode
- Form testers
- Camshaft, crankshaft measuring machines

The spec is created to have a common interface to give the possibility to connect different application packages to all DMEs.

1.3 Sub Working group I++ DME Interface (Dimensional Measuring Equipment)

I++ turn one's attention to the difficulties of the interfaces. So I++ defined a team, who are responsible to work out a requirement specification for a neutral I++ DME interface.

1.4 Requirement

We demand a clear definition, that the DME vendor is responsible for the accuracy of his measurement equipment, in the sense that all necessary functions related to the equipment accuracy have to be implemented in the neutral I++ DME interface.
All calibration data, no matter where created, must be stored in the DME interface.

NIST will produce tools for testing the I++ DME Interface specification. These would be made freely available outside NIST. Simulated Server/Client for verification, development and certification scenarios will be provided.

1.5 What is the intention of the specification ?

- To use State-Of-The-Art technology but useable in legacy systems
  Definition of interface should be independent

of transport-layer and transport-technology

- It should provide Scalability
  "an easy machine should have an easy interface"

- Extendibility
  It should be possible to add new types of machines

- Encapsulation
  The complexity and vendor-specific know-how
  of the real machine should, can be hidden behind the interface

- Self-Explaining, Consistent, Complete
  Though being complex the interface should be in a
  notation that can be easily understood

Picture 1: Methods for description

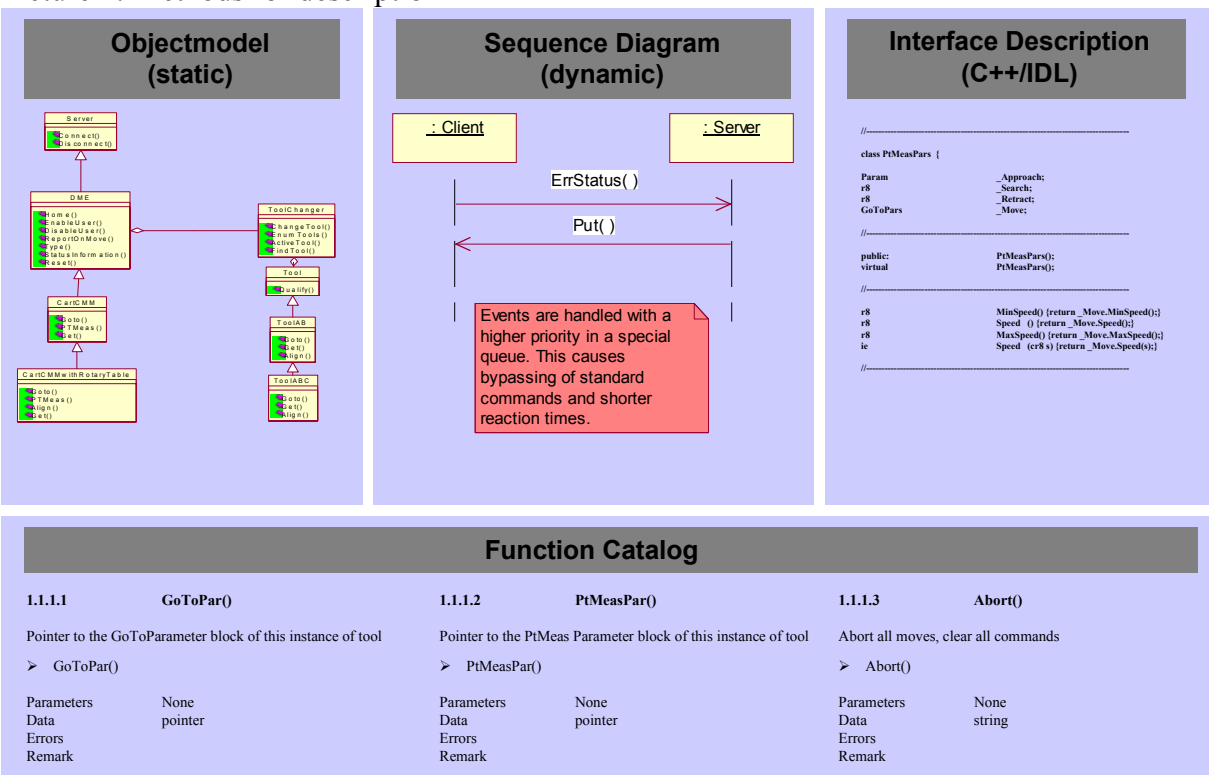

The following requirement specification is capable of further development. This means the specification is valid for CMM's as well as other measurement equipment.

1.6 Schedule steps

Changes from 1.0 to 1.1:	Multiple arms (port numbers...)
Changes from 1.1 to 1.2:	Scanning, hints, collision handling
Changes from 1.2 to 1.3:	Rotary table Note: Versions 1.2 and 1.3 have been merged to 1.3!
Changes from 1.3 to 1.4:	Form testers
Changes from 1.4 to 2.0:	Optical sensors (based on OSIS requirements)
Changes from 2.0 to 2.1:	Camshaft, crankshaft measuring machines

Unscheduled extension:

- Probe-calibration-parameters-protocol
  Separate GUI and qualification routines; handle qualification process in client application,
  List of input-parameters necessary for calibration, all calibration data, no matter where created, must be stored in the DME, for simple probes e.g. index able touch trigger-probes PH9-type.
- Add Jog-Box-Display methods
- Use Unicode for strings
- Export tool-assembly information
- New Csy's: JogDisplayCsy, JogMoveCsy, SensorCsy
- Handling more than one socket between client and server
- Provide additional properties (DME Version No., Type of CMM, Brand of implementer…)

1.7 History

<u>1.1 Multiple arms:</u>
Changes: 6.3.3, 6.3.3.3, 6.3.3.4, 10 becomes Appendix A
Added: 10

<u>1.3 Scanning:</u>
Improvements: 6.1.1, 6.3.3
Added: 11

<u>1.3 Rotary Table and Various:</u>
Improvements: 1.6, 1.7, 2., 6.1.4, 6.2.1, 6.2.3.1, 6.3.1.7, 6.3.2.8, 6.3.2.11, 6.3.2.13, 6.3.6, 6.3.7, 7.7, 8.1, 8.2, 9.1, 9.5.1
Added: 6.3.3.13, 6.3.8, 6.3.9, 6.3.2.23, 6.3.3.13, 9.5.6, 9.6, 9.7, 12

<u>1.3.1.draft Improvements according feed back of implementers:</u>

Improvements: 1.6, 1.7, 5.2, 5.6, 6.1.4.1, 6.1.4.2, 6.2.1, 6.2.2.2, 6.2.3, 6.2.3.1, 6.2.4.1, 6.2.5, 6.3.1.1, 6.3.1.5, 6.3.1.6, 6.3.1.7, 6.3.1.9, 6.3.1.10, 6.3.1.11, 6.3.2.2, 6.3.2.6, 6.3.2.7, 6.3.2.12, 6.3.2.13, 6.3.2.14, 6.3.2.15, 6.3.2.16, 6.3.2.19, 6.3.2.20, 6.3.2.21, 6.3.2.22, 6.3.2.23, 6.3.3, 6.3.3.1, 6.3.3.3, 6.3.3.12, 6.3.3.13, 6.3.5.1, 6.3.5.2, 6.3.6, 6.3.7, 6.3.9, 7.7, 8.2, 9.1, 10, 9.5.2, 11.1.2, 11.2.2, 11.2.3, 11.2.4, 11.3.1, 11.3.2, 11.3.3, 11.3.4, 11.3.5, 11.3.6, 11.4.1, 11.4.2, 12.1, 8.1, 8.2, 11.1.2, 11.2.3. 11.3.1, 11.3.2, 11.3.3, 11.3.3, 11.3.4, 11.3.5, A.2.1, A.2.3, A2.2, A.3.1, A.4.2, A.6.6, A.7.2
Added: 6.3.2.23, 6.3.2.24, 7.8
Shifted: 9.7 to 1.8

1.4 Form testers and various:
Improvements: 1.6, 5.2, 5.3, 5.5, 5.6, 5.9, 6.1.4.2, 6.2.2.2, 6.2.4.1, 6.3.2.10, 6.3.2.23, 8.1, 9.1, A.2.1, A.3.1, A6.2
Added: 6.3.1.14, 6.3.2.26, 6.3.10, 6.3.11, 6.3.12, 6.3.13, 13. 13.1, 13.2, 13.3, 13.4

1.8 Links to important sites

Link to IA.CMM where this spec, the Rose model files and also the C++ header files can be downloaded:

http://www.iacmm.org/stand_main.htm

Link to NIST where the DME test bed can be downloaded:

http://www.isd.mel.nist.gov/projects/metrology_interoperability/resources.html

2 Physical System Layout

This section is intended to help explain the context of this specification. It is not part of the specification.

Picture 2 shows two examples of the physical system layout for these types of machines.
In both examples the main components are
Client computer (Client) and
DME-Interface
Machine (including frame, motors, scales,...)

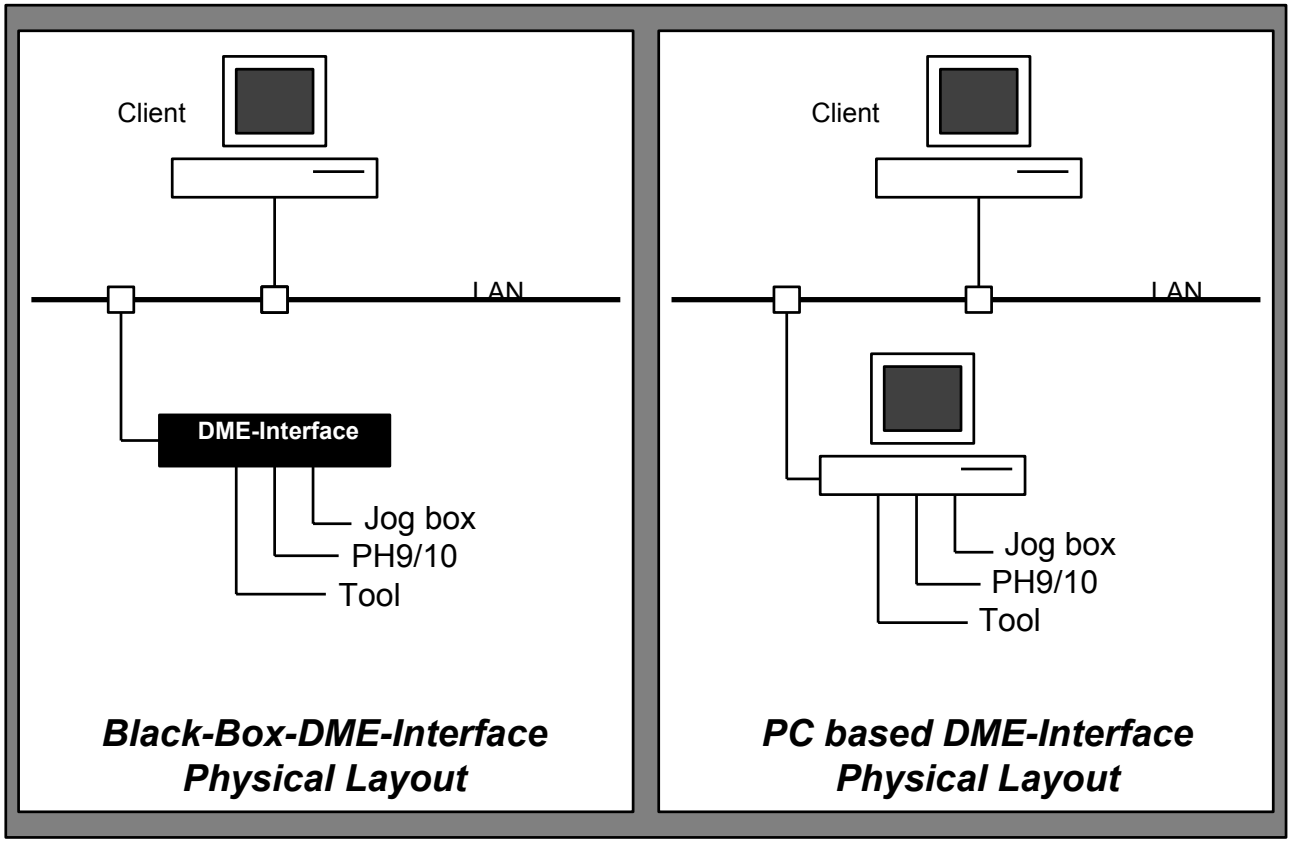

Client and DME-Interface are connected through a local area network (LAN).
Both client and DME-Interface use TCP/IP sockets for communication.
The client computer runs the application software for the measurement task.
The DME-Interface implements all functionality required to drive the machine.
The application software on the client talks to the DME-Interface in order to execute elementary measurement tasks (picking points, scanning,).
This specification describes the protocol that the client uses to run the machine through the DME-Interface.
Explanations: In the following lines client is used synonym for the application software, server is used for DME. Client and server can be on different computers, but they can also run on the same hardware being connected by TCP/IP socket.

2.1 DME-Interface Implementations

The main difference between the two implementations of the DME-Interface in Picture 1 is the physical implementation of the DME-Interface, which is

PC based or

"Black Box" based

While the PC based DME-Interface provides a direct physical (screen, keyboard) user interface the black box based system provides no direct user interface,
PC based systems may provide additional low-level user interfaces that help the user to control and monitor the machine.
"Black Box" based systems have a potential cost advantage.

2.2 DME-Interface Model

Picture 3 shows the system layout we will use in this document for explanations.
It is important to recognize that all subsystems are linked to the DME-Interface.
This implies that the client must use the protocol to access subsystem functionalities, like rotating a PH10.

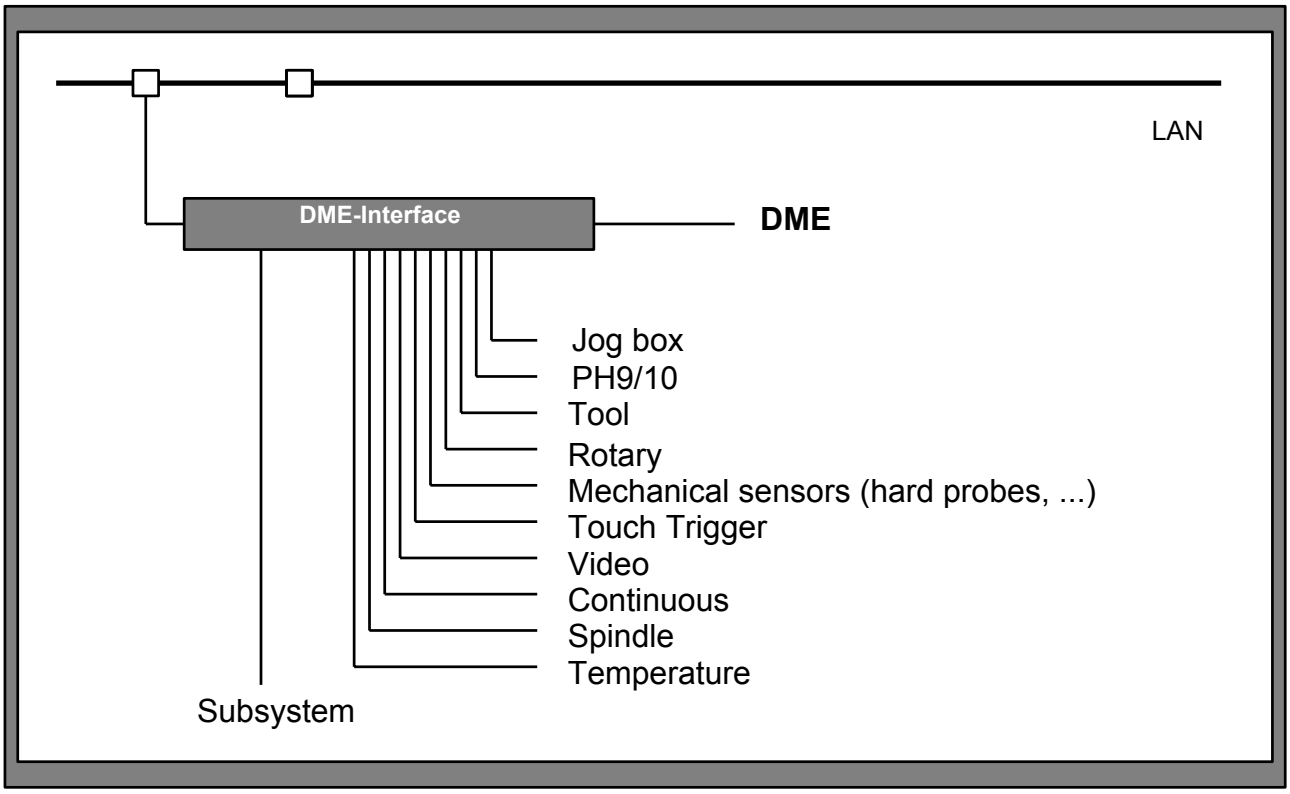

2.3 Logical System Layout

Picture 4 shows the logical layout of the system with the following components:
DME-Interface and subsystems
Application
Monitor
Diagnostics

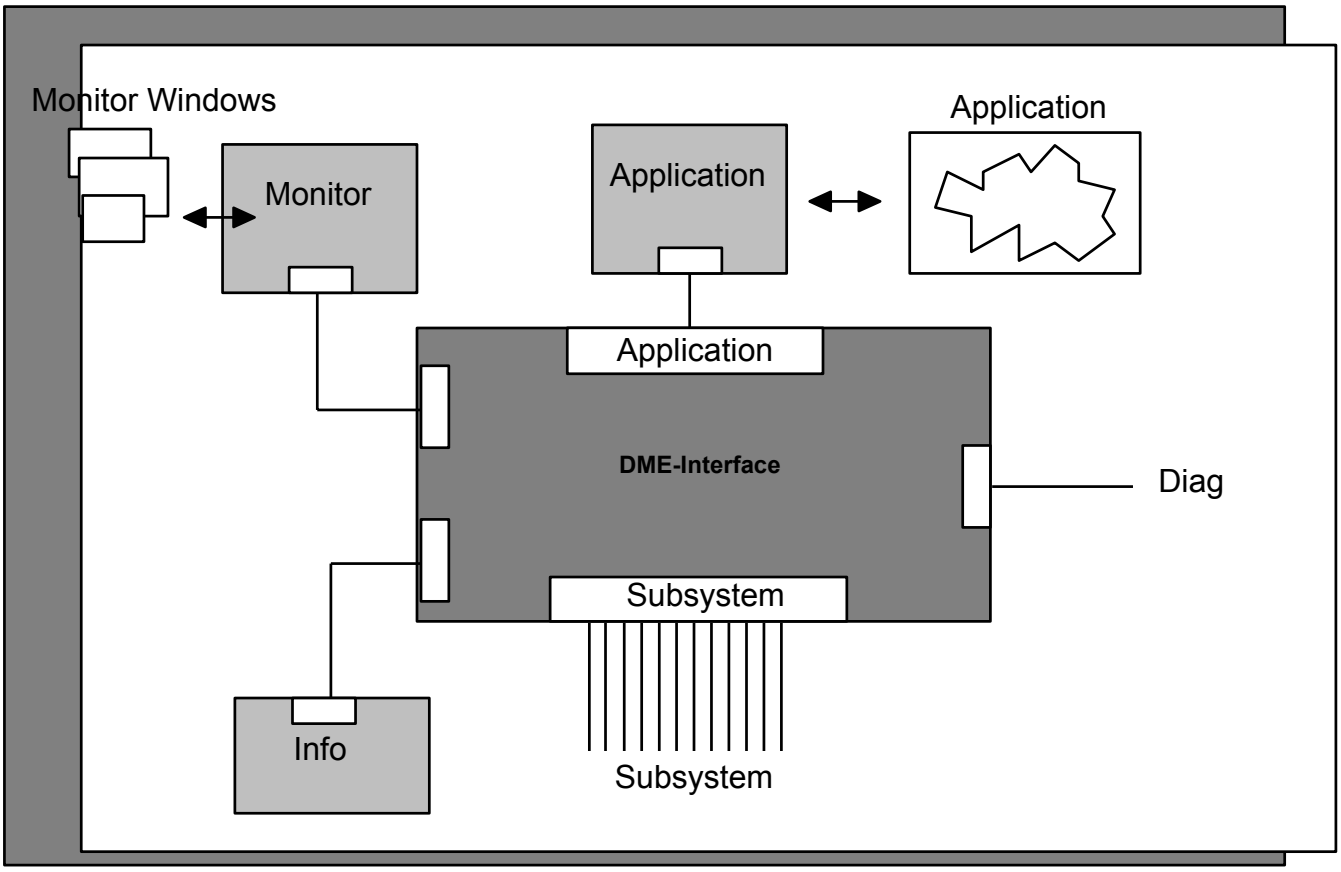

2.4 DME-Interface and Subsystems

The DME-Interface is a piece of software that runs on a PC based or "black box" based piece of hardware. This hardware connects to all subsystems (Picture 3).
The DME-Interface handles all subsystems and provides TCP/IP sockets for communication.
When the hardware is powered up and the DME-Interface is started, the DME-Interface will create up to 4 TCP/IP ports:

Application port	(required)	port No. 1294
Monitor port	(optional)	
Diagnostics port	(optional)	
Info port	(optional in V.1.0 will be required in future version)	

2.4.1 Application

The application is a piece of software that runs on the client computer and that uses the application port to run the DME.
This specification describes the protocol used on the application port.
The port number 1294 is internationally defined for this connection.
This port is the only one to start any movements of machine or tool. Only this allows changing any parameter.

2.4.2 Monitor

The machine monitor (monitor) is a piece of software that is used to display controller specific information like current machine position, active probe, …
It connects to the monitor port to receive the displayed information from the DME-Interface.
The monitor is an optional component.
The controller may implement an equivalent functionality, for example by displaying the machine position on the jog box display.
In most cases the DME vendor will supply the monitor.
A description of the monitor is not part of this specification.

2.4.3 Diagnostics

The machine diagnostics (diagnostics) is a piece of software that is used to display diagnostic information necessary to service, repair or set up the DME.
It connects to the diagnostic port to receive information from the DME-Interface.
The diagnostic is an optional component.
The DME vendor supplies the diagnostics.
A description of the diagnostics is not part of this specification.

2.4.4 Info

The info is a piece of software that runs on a client computer. The info obtains information from the DME-Interface through the info port and provides the information to the client (axis, sensors, …).
This specification describes the protocol used on the info port.

The functions possible on the info port are a subset of the functions possible on the application port. **On this port machine moving commands and setting of parameters are prohibited. Only information receiving dialog is allowed.**

3 Hierarchy of Communication

3.1 Layers

The properties of the measuring equipment and the methods to handle them are defined by the object model, see picture 13.
The actual defined transport layer is to transmit ASCII strings via TCP/IP socket.
The layers are separated to have the chance to change the transport layer to future technologies.
Picture 5

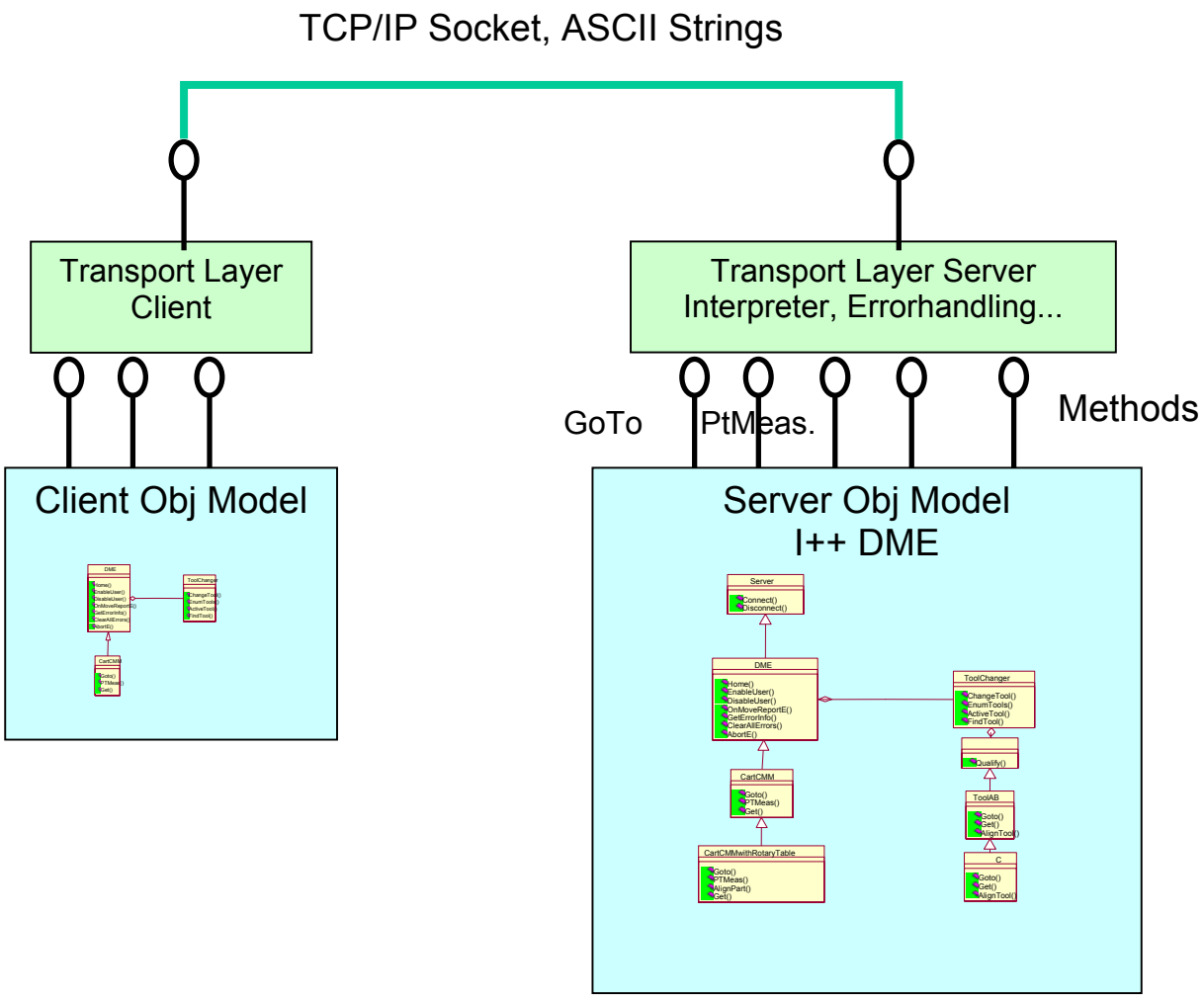

3.2 Examples of basic use cases

3.2.1 Sequence Diagram: StartSession, EndSession

Picture 6

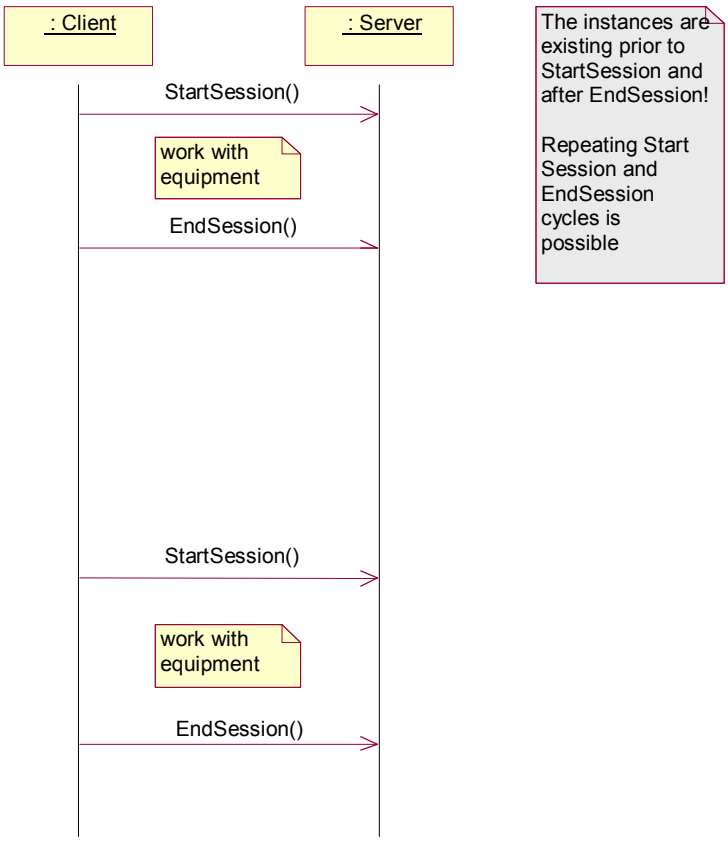

3.2.2 Sequence Diagram: Standard Queue Communication

Picture 7

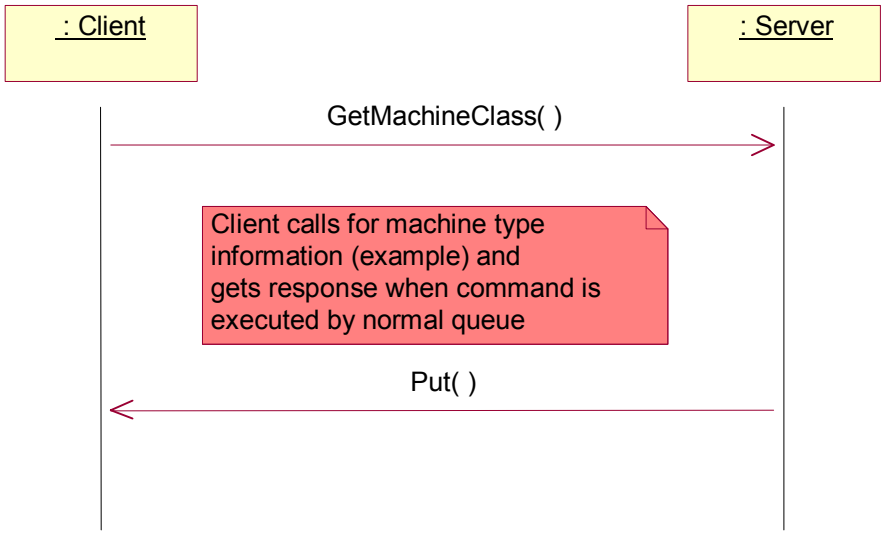

Sequence Diagram: Event, Fast Queue Communication (Single Shot Events)
Picture 8

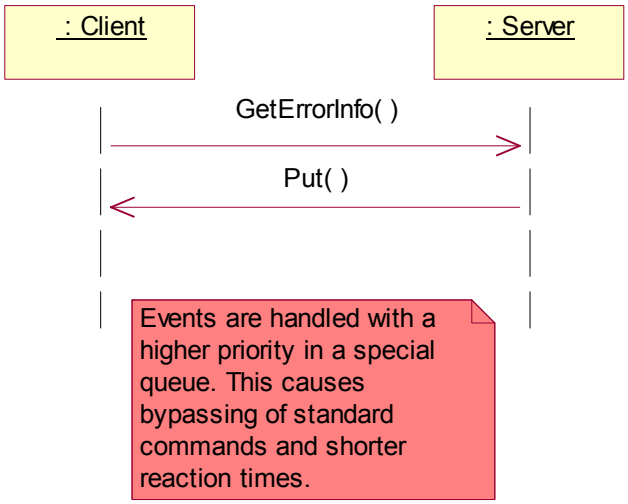

3.2.3 Sequence Diagram: Event, Fast Queue Communication (Multiple Shot Events)
Picture 9

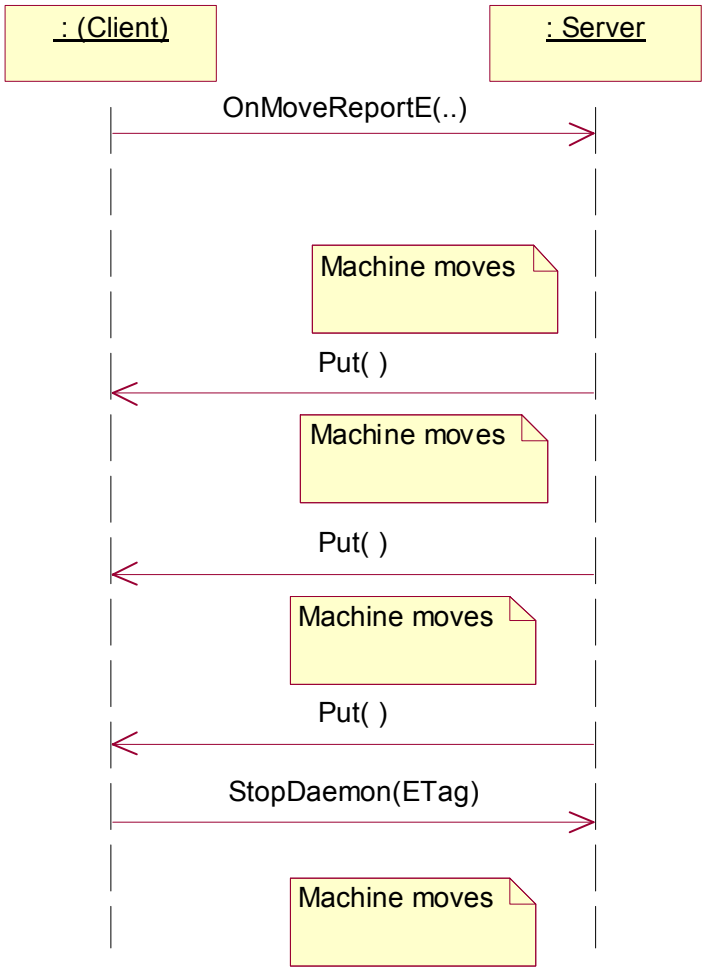

3.2.4 Sequence Diagram: Handling of Unsolicited Errors

Picture 10

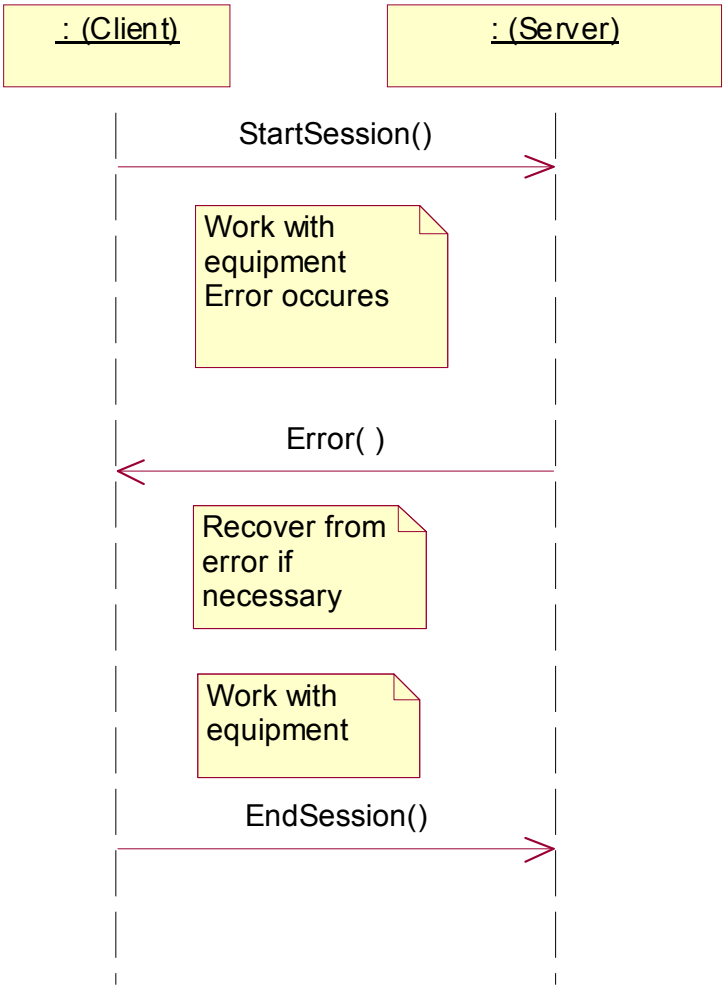

4 Events

To increase performance and to reduce traffic on the interface the Event transactions are created. Events use tags starting with E.

Picture 11: Explanation of the difference between normal and fast queue.
See also sequence diagram section 6.2.4.

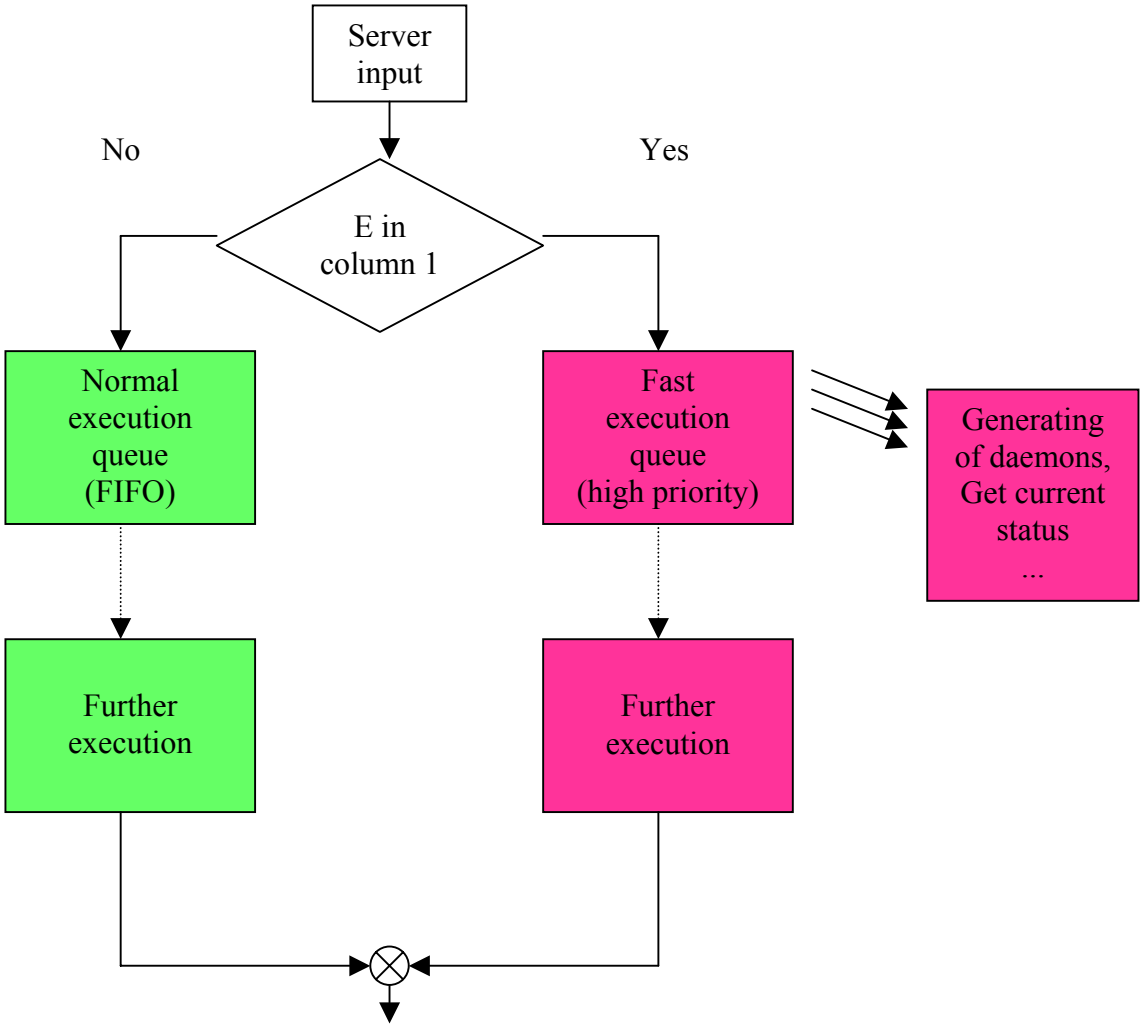

4.1 Transaction events, syntax

Event transactions are initiated by the client.
Event requests are handled by the server with a higher priority than the synchronous communication. This means that the requests can bypass the normal command queue in the server.
In addition to normal transaction processing, the server will trigger an event. Legal tags are tags starting with E0001 up to E9999. The tag E0000 is reserved for events with no relation to legal tags.

4.2 One shot events

These Events are used to generate exactly one asynchronous reaction of the server. F.I. getting asynchronous status or position information.
The transaction creates a daemon that triggers an event. The daemon will die after firing the event.

4.3 Multiple shot events

The transaction creates a daemon that triggers events based on a condition. The client must stop this daemon explicitly by a StopDaemon ("Event transaction tag") method.

4.4 Server events

Server events use tag E0000. They are used to report manual hits, keystrokes, supported machine status changes...

5 Object Model

5.1 Explanation

The following diagrams (picture 12 and 13) show the designed class structure of the interface. It shows

- the classes representing the main components of real coordinate measurement equipment (in this, first case coordinate measurement machine)
- the organization of methods and properties in these classes
- the relations between the main classes, the generalizations (specialization vice versa), the aggregations...
- this object model defines the structure of the interface and the syntax. It defines how to set and get the properties of the virtual components of this machine (section 6)
- Picture 11 is generated to help at a first step with the most important commands.
- Picture 12 is reengineered from and consistent with the header files (section 9). It shows also programming aspects as virtual definitions of methods in upper classes as DME and also property aspects as GoToPar and PtMeasPar blocks.

5.2 Reduced Object Model

Picture 12, basics, outside view, method oriented

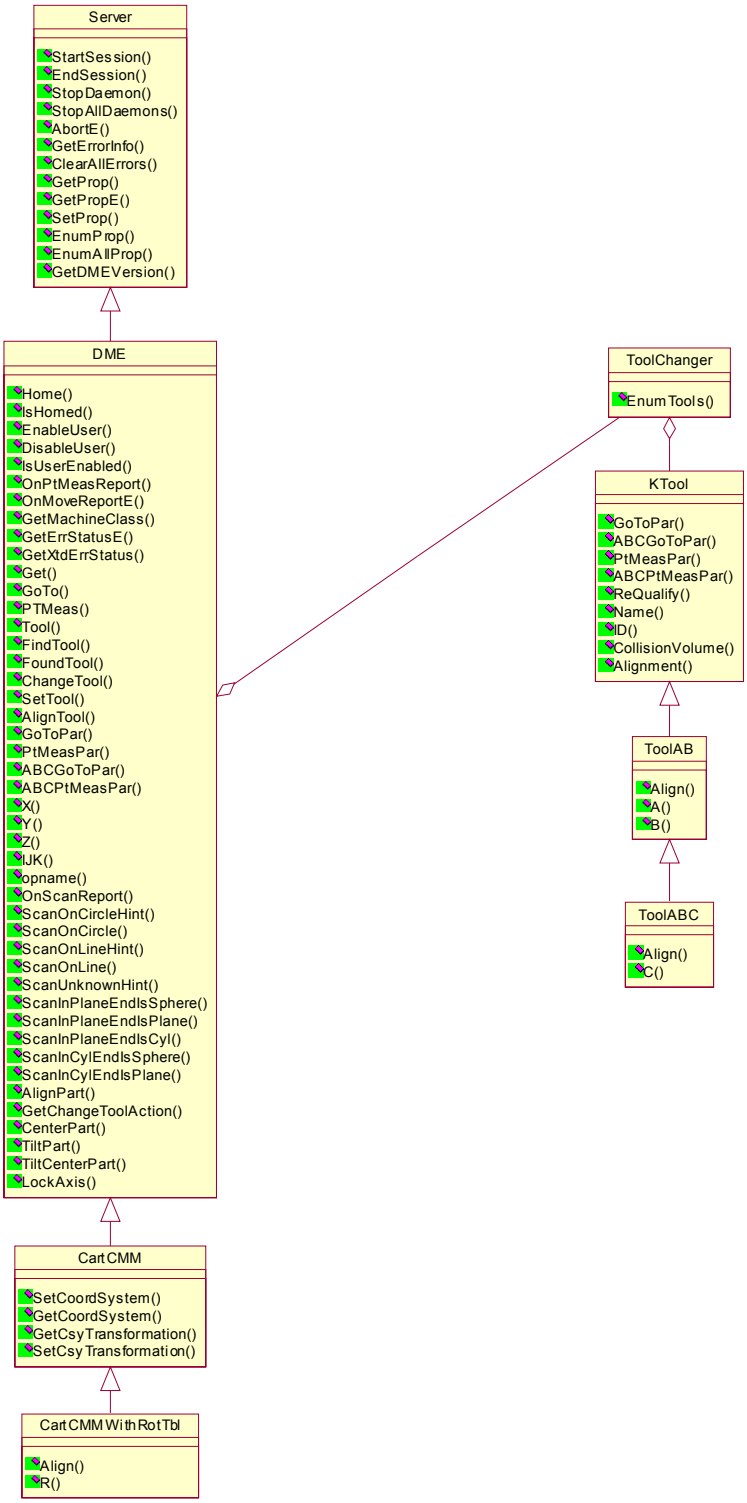

5.3 Full Object Model

Picture 13, please zoom the .pdf file view.

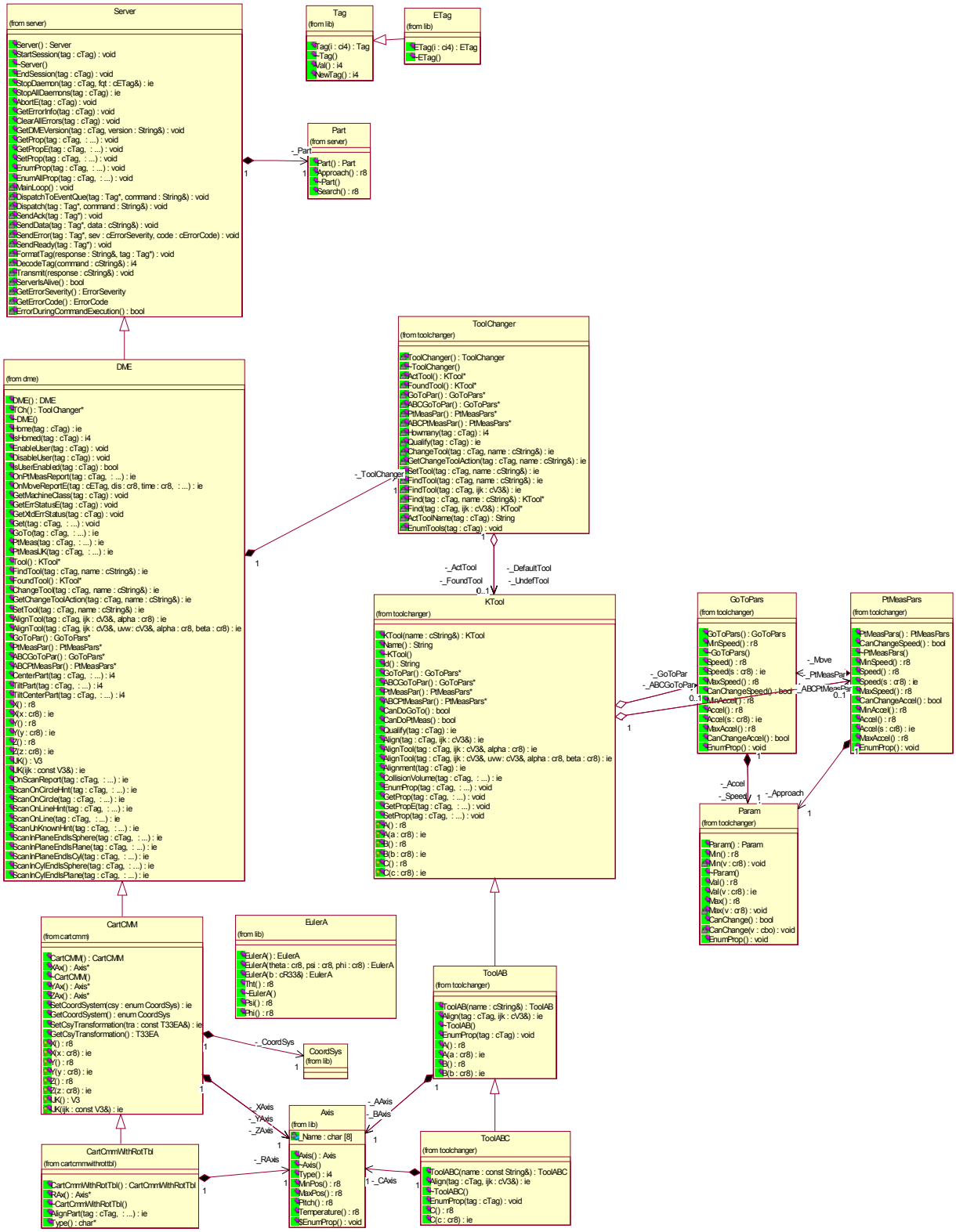

5.4 Packaging for visualization

Picture 14

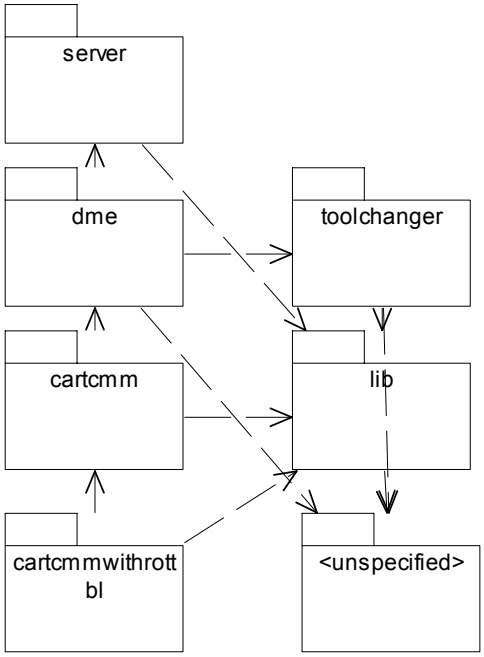

5.5 Contents of server

Picture 15

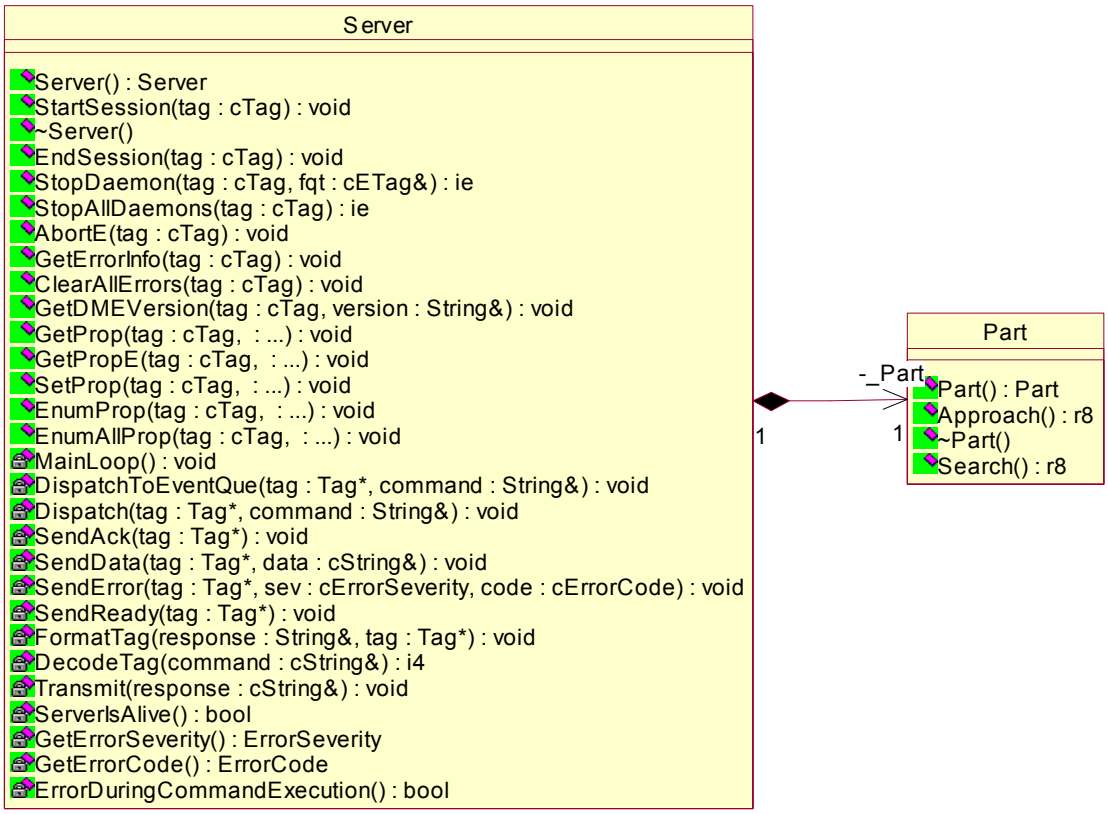

5.6 Contents of dme

Picture 16

```
DME

DME() : DME
TCh() : ToolChanger*
~DME()
Home(tag : cTag) : ie
IsHomed(tag : cTag) : i4
EnableUser(tag : cTag) : void
DisableUser(tag : cTag) : void
IsUserEnabled(tag : cTag) : bool
OnPtMeasReport(tag : cTag, : ...) : ie
OnMoveReportE(tag : cETag, dis : cr8, time : cr8, : ...) : ie
GetMachineClass(tag : cTag) : void
GetErrStatusE(tag : cTag) : void
GetXtdErrStatus(tag : cTag) : void
Get(tag : cTag, : ...) : void
GoTo(tag : cTag, : ...) : ie
PtMeas(tag : cTag, : ...) : ie
PtMeasIJK(tag : cTag, : ...) : ie
Tool() : KTool*
FindTool(tag : cTag, name : cString&) : ie
FoundTool() : KTool*
ChangeTool(tag : cTag, name : cString&) : ie
GetChangeToolAction(tag : cTag, name : cString&) : ie
SetTool(tag : cTag, name : cString&) : ie
AlignTool(tag : cTag, ijk : cV3&, alpha : cr8) : ie
AlignTool(tag : cTag, ijk : cV3&, uvw : cV3&, alpha : cr8, beta : cr8) : ie
GoToPar() : GoToPars*
PtMeasPar() : PtMeasPars*
ABCGoToPar() : GoToPars*
ABCPtMeasPar() : PtMeasPars*
CenterPart(tag : cTag, : ...) : i4
TiltPart(tag : cTag, : ...) : i4
TiltCenterPart(tag : cTag, : ...) : i4
X() : r8
X(x : cr8) : ie
Y() : r8
Y(y : cr8) : ie
Z() : r8
Z(z : cr8) : ie
IJK() : V3
IJK(ijk : const V3&) : ie
OnScanReport(tag : cTag, : ...) : ie
ScanOnCircleHint(tag : cTag, : ...) : ie
ScanOnCircle(tag : cTag, : ...) : ie
ScanOnLineHint(tag : cTag, : ...) : ie
ScanOnLine(tag : cTag, : ...) : ie
ScanUnKnownHint(tag : cTag, : ...) : ie
ScanInPlaneEndIsSphere(tag : cTag, : ...) : ie
ScanInPlaneEndIsPlane(tag : cTag, : ...) : ie
ScanInPlaneEndIsCyl(tag : cTag, : ...) : ie
ScanInCylEndIsSphere(tag : cTag, : ...) : ie
ScanInCylEndIsPlane(tag : cTag, : ...) : ie
```

5.7 Contents of cartcmm

Picture 17

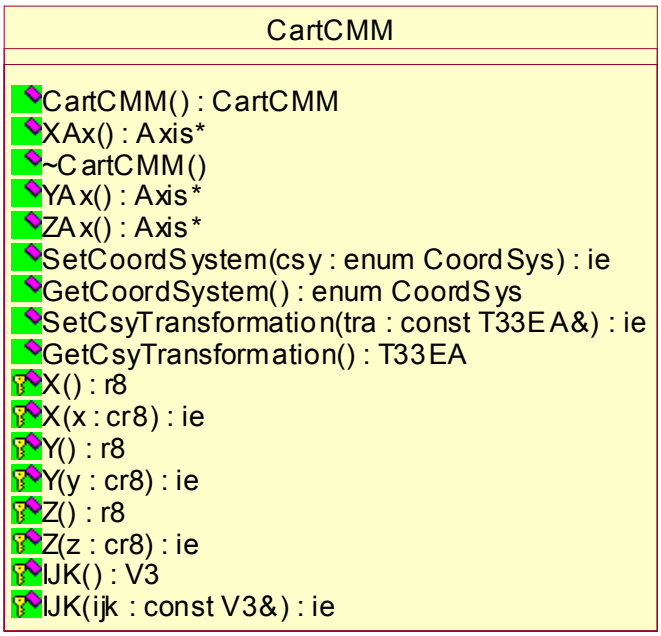

5.8 Contents of cartcmmwithrotarytable

Picture 18

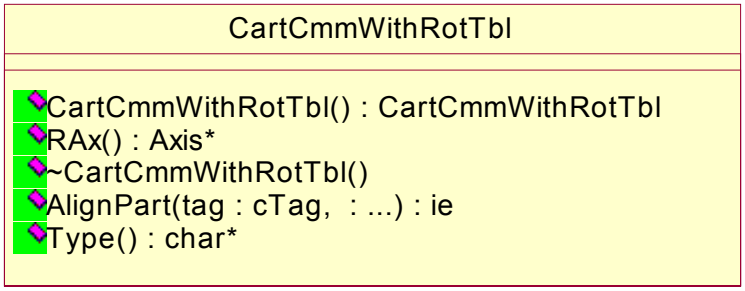

5.9 Contents of toolchanger

Picture 19

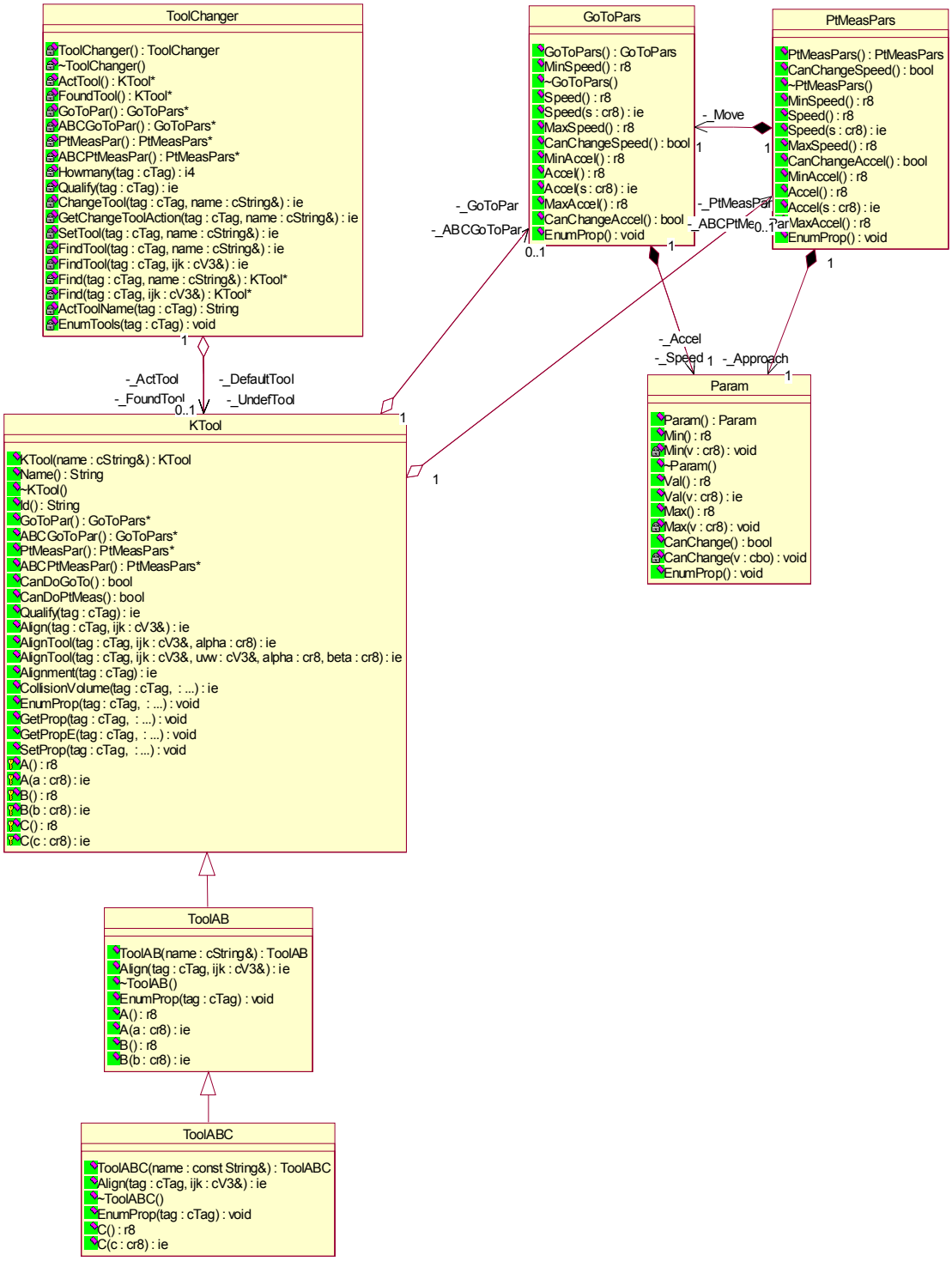

5.10 Contents of lib and unspecified

Picture 20

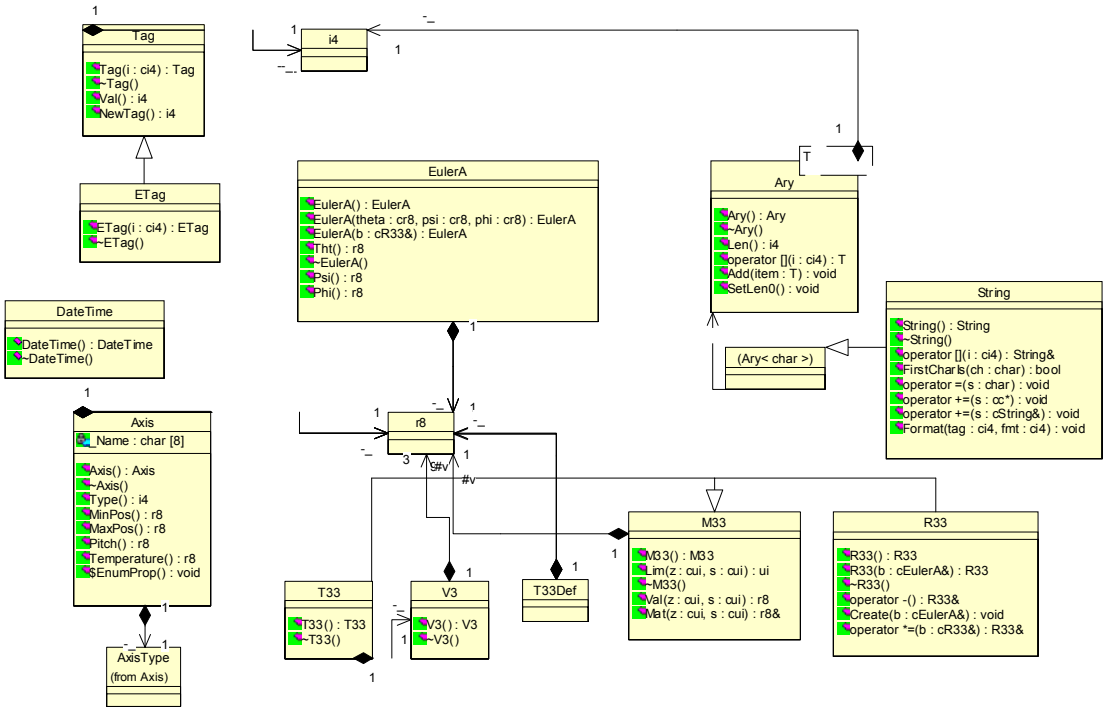

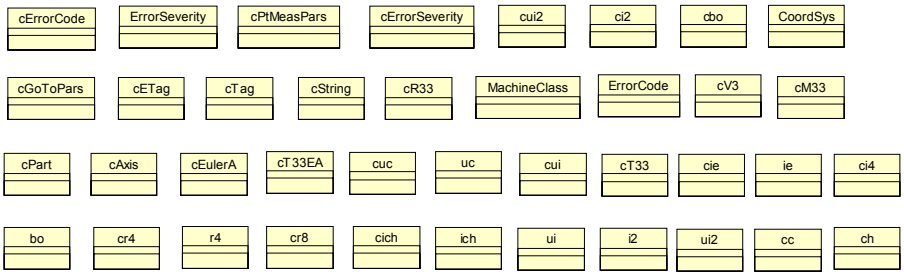

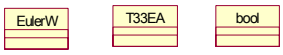

6 Protocol

6.1 Communication

Communication between application client and I++DME server is based on the standard TCP/IP protocol. It uses the application port with port-no. 1294.

6.1.1 Character set

All bytes received and sent on the application port of the server are interpreted as 8-bit ASCII characters. The 128's bit must always be zero.
Only characters in the range from ASCII code = 32 (space) to ASCII code = 126 (~) may be used, except that the character pair Carriage Return (<CR>, ASCII code = 13) and Line Feed (<LF>, ASCII code = 10) is used as a line terminator.
<CR> and <LF> must always be sent as a pair in the order <CR> followed by <LF>.
If the server receives a message containing any character outside of this range or containing a <CR> or <LF> anywhere except at the end of the message, the server must send an error response, using error 0007, "Illegal character".
Upper case letters and lower case letters are regarded as different letters in this protocol. In other words, the protocol is case sensitive.

6.1.2 Units

Numbers that represent measures must use the following units.

Length:	millimeters
Time:	seconds
Angles:	decimal degrees (no minutes or seconds)
Temperature:	degrees Celsius
Force:	Newtons

Compound measures use combinations of these units. For example, speed (which is length per unit time) must be expressed in millimeters per second.

6.1.3 Enumeration

An enumeration is a list of zero to many items from a specified list of candidate items. Each item may appear in the enumeration list at most once, and the order in which the items appear on the enumeration list is not significant. For example, if the candidate list is (a, b, c, d, e):

1. (a, b, d) and (d, a, b) are the same enumeration, and both are legal.
2. (c, b, c) are illegal because c appears twice.
3. (c, e, h) are illegal because h does not appear in the candidate list.

6.1.4 Definitions used in formats

This section defines the entire syntax of well-formed I++ DME commands

and responses, up to the <CR> <LF> line terminator. The syntax is defined using a production language. The production language is described in section 6.1.4.1, and the syntax in section 6.1.4.2.

6.1.4.1 Production Language

Each statement in the production language is a single line of the form

term :== definition

This means that any sequence of characters that matches the definition can be considered to be an instance of the term.

For example, Num :== "0".."9" is a statement that means a Num is defined to be any of the characters from zero to nine.

The following special symbols are used in the production language.

"" Any single character between double quotes means that literal single character. For example "X" means X (ASCII 88).

.. means in the range. For example, "0".."9" means a single digit between zero and nine (including 0 and 9).

| means "or"

() A set of left and right parentheses means exactly one of whatever is enclosed. For example, (A | B) means A or B. If a left or right parenthesis is surrounded by double quotes, i.e. "(" or ")", it loses its special meaning and is just a single character.

[] A set of square brackets means zero or one of whatever is enclosed. For example, ["+" | "-"] means a plus sign, a minus sign, or no sign at all.

{} A set of curly brackets means zero to many of whatever is enclosed. For example, {Num} means zero to many digits.

Anything on the right side of a statement that is not a special symbol must be either a term already defined or a single character enclosed by double quotes. Spaces inside a line have no significance other than to separate terms.

6.1.4.2 Syntax

The syntax described here is complete, except that actual allowed values of Name and ArgList are much more limited than given here. Only names of actual Commands may be used, and for each Command, only certain arguments are valid. The allowed names and arguments are described in Sections 6, 11, and 12.

In four cases below, additional limitations are placed on allowed syntax using natural language.

The definition of Number is necessarily messy-looking because the following three conditions (among others) must apply:
a. There must be at least one digit somewhere in the number.
b. It is OK if there are no digits before the decimal point.
c. It is OK if there are no digits after the decimal point.

In natural language, the definition of a number means: An optional sign followed by one or more digits (optionally with a decimal point before the digits, between two digits, or after the last digit) followed optionally by an exponent. An exponent is an upper case E followed by an optional sign, followed by one, two, or three digits.

The definition of ErrorResponse is given on two lines because it will not fit on one line.

The definition implements the following rules regarding optional spaces. Any number of optional spaces may appear (1) before or after a comma, (2) before or after a left parenthesis (3) before a right parenthesis.
Optional spaces may appear nowhere else. Note that a single non-optional space is required in several places.

s :== " "
I.e. a single space (ASCII 32)

q :== """
I.e. a double-quote character (ASCII 34)

Char :== s | "!" | "#" | .. | "~"
I.e. ASCII character codes from space (ASCII 32) to ~ (ASCII 126), excluding the double quote character (ASCII 34).

String :== q Char {Char} q
the maximum string length is limited by the maximum line length, see chapter 6.2.

Alp :== "A" .. "Z" | "a" .. "z"
I.e. any upper case letter (ASCII 65 to 90) or lower case letter (ASCII 97 to 122)

Num :== "0" .. "9"
I.e. any digit (ASCII 48 to 57).

BasicName :== Alp {Alp | Num}

Name :== BasicName { "." BasicName}

UnsInt :== Num Num Num Num

Tag :== Num UnsInt
except that 00000 is not allowed.

ETag0 :== "E" "0" "0" "0" "0"

ETag :== "E" UnsInt
except that E0000 (which is ETag0) is not an ETag.

Exponent :== ("E"| „e“)["+"|"-"]Num[Num[Num]]

Number :== ["+"|"-"]((Num{Num}["."]{Num}) | ("."Num{Num}))[Exponent]
except that the total number of digits shall not exceed 16.

SCommaS := {s} "," {s}

SLeftParenS := {s} "(" {s}

SRightParen := {s} ")"{s}

PropertyArgList :== {Number {SCommaS Number}}
Note that this may possibly be no characters at all.

Property :== Name SLeftParenS PropertyArgList SRightParen

Argument :== String | Number | Property | ETag | BasicName

MethodArgList :== {Argument {SCommaS Argument}}
Note that this may possibly be no characters at all.

Method :== BasicName SLeftParenS MethodArgList SRightParen

Command :== (Tag | ETag) s Method

AckResponse :== (Tag | ETag) s "&"

DoneResponse :== (Tag | ETag) s "%"

NumData :== Number {SCommaS Number}

PropData :== String SCommaS String

PropertyList :== Property {SCommaS Property}

DataData :== NumData | PropData | Method | PropertyList

DataResponse :== (Tag | ETag) s "#" s DataData

F1 :== Num

F2 :== UnsInt

F3 :== String

Text :== String

ErrorResponse :== (Tag | ETag) s "!" s "E" "r" "r" "o" "r"
SLeftParenS F1 SCommaS F2 SCommaS F3 SCommaS Text SRightParen

Response :== AckResponse | DoneResponse | DataResponse | ErrorResponse

6.2 Protocol Basics

- The protocol is line oriented.
- Each line must be terminated by <CR><LF>.
- The maximum number of characters in a line should not exceed 65536.
- A line sent from the client to the server is called a CommandLine.
- A line sent from the server to the client is called a ResponseLine.
- In examples the terminating <CR><LF> is not shown !
- The protocol is case sensitive.

6.2.1 Tags

The first 5 characters of each CommandLine represent a tag.
The client generates these tags. The client uses two types of tags:

- CommandTag
- EventTag

A CommandTag is a 5 digit decimal number with leading zeros present.
The number must be between 00001 and 99999.
Command tags are considered to be numbers in the range of 00001 and 99999.

The client must make sure, that command tags sent to the server are unique while the server processes the commands related to the tags. The easiest way to accomplish this is to increment the tag number each time a new command is send.
Examples of Event tags created by the client:

```
04711          // tag is ok
01710          // ok
00020          // ok
20             // error; only 2 digits
00000          // error; out of range must be >=00001 and <=99999
```

An EventTag is a 4 digit decimal number that is preceded by the character E (ASCII code=69).

The number must be between 0001 and 9999.
Event tags are considered to be enums in the range of E0001 and E9999.

To differ in the command layer also between the normal and fast queue, commands for the fast queue end with an upper case E. The reason is to be independent from the transport layer.

The client must make sure, that event tags send to the server are unique while the server processes the commands related to the event tags. The easiest way to accomplish this is to increment the tag number each time a new command is send.
Examples of tags created by the client:

```
E3333          // tag is ok
E0456          // ok
E0000          // error; out of range must be >=1 and <=9999
E20            // error; only 3 characters
A4711          // error; illegal first character
```

As for a CommandLine, the first 5 characters of a ResponseLine represent a tag (ResponseTag). During normal command processing by the server it will use the tag received from the client as ResponseTag so the client can use this tag to relate the ResponseLine to a CommandLine. In addition the server can send a ResponseLine using ResponseTag E0000 for reporting unsolicited events to the client. The “Illegal tag” error message should be reported by the E0000 tag.

6.2.2 General line layout

From now on we will use

- Command as a synonym for CommandLine
- Response as a synonym for ResponseLine.

6.2.2.1 CommandLine

The first 5 characters in each CommandLine represent the CommandTag.
The character at column 6 must be a space (ASCII code = 32).
The command starts at column 7.

Command :== Tag | Etag “ “ Method

6.2.2.2 ResponseLine

The first 5 characters in each Response line represent the ResponseTag.
The character at column 6 must be a space (ASCII code = 32).
The character at column 7 must be one of the following:

- &
- %
- #
- !

The meaning of the character at column 7 is explained later.
The character at column 8 must be a space when the line length is greater than 7.
Example:
00004 # X(99.93), Y(17.148)

In addition the returned data must exactly match the requested data. No data may be omitted and no data may be added to the response line.

6.2.2.3 Definitions

In the following we will use

- Ack as a synonym for a ResponseLine where the 7th character is a &
- Transaction complete
  as a synonym for a ResponseLine where the 7th character is a %
- Data as a synonym for a ResponseLine where the 7th character is a #
- Error as a synonym for a ResponseLine where the 7th character is a !

6.2.3 Transactions

The basic protocol unit is a transaction. For each transaction, the client will create a tag. The tag identifies the transaction.

- Transactions are initiated by the client.
- The same tag is used during a transaction.
- Transactions can overlap.
- A client can start a new transaction only after having received an Ack of the previous transaction (except StartSession()) from the server.
- When using overlapped transactions, tags sent to the server must be unique.
- When using overlapped transactions and the server is too busy to accept new transactions it must delay sending the Ack until it is ready to accept a new transaction.
- When using overlapped transactions, the server must make sure that the Ack, Data (Error) and Transaction complete are sent back to the client in the right order. This means, if transaction 00001 is started before transaction 00002, the server is not allowed to send a Data, Error or Transaction complete from transaction 00002 before the Transaction complete from transaction 00001. At any point in time the server is allowed to send a line starting with an EventTag.

A transaction is complete after the server sends the Transaction complete. If a transaction is complete, all processing on the driver side related to the transaction has completed.

6.2.3.1 Example

Client to Server	Server to Client	Comment
00001 Home()		Use tag 00001 for home command, client sends “home” command
	00001 &	Server accepts command (Ack)
	00001 %	Server reports transaction complete
00002 GoTo(X(100))		Move to x=100
	00002 &	command accepted (Ack)
	00002 %	position reached (Transaction complete)
00003 GoTo(X(100000))		moving out of limits
	00003 &	command accepted
	00003 ! Error(3, 2500, GoTo, “Machine limit encountered (Move Out Of Limits)”)	Error message
	00003 %	transaction complete
00004 ClearAllErrors()		Clear all server errors
	00004 &	
	00004 %	
00005 Get(X(), Y())		get position of x, y axis

	00005 &	
	00005 # X(99.93), Y(17.148)	x and y position
	00005 %	Transaction complete

6.2.4 Events

At any point in time the server may notify that something happened by sending an event to the client.
If the event is triggered by a transaction, the tag used is that of the transaction.
The server must first send an Ack before it can send the Response with the EventTag.
This Response can then be sent before or after the Transaction complete.
If an event is triggered by a command, f.I. ErrStatusE, the server handles the execution of the command (responding of the error status) with a higher priority. The Transaction complete is responded in the order of the standard queue.
At any point in time the server can send a Response with EventTag E0000 to inform the client that something unsolicited has happened in the server.

6.2.4.1 Examples

Unsolicited error message

Client to Server	Server to Client	Comment
	E0000 ! Error(3, 500, HealthCheck, “Emergency Stop”)	An unsolicited error message occurs
		In this example the client must display error and inform user what to do

Assume the user moves the machine using joysticks and the server wants to report this movement.

Client to Server	Server to Client	Comment
00048 EnableUser()		
	00048 &	
	00048 %	
E0553 OnMoveReportE(Time(1),Dis(20),X(), Y(), Z())		
	E0553 &	
	E0553 %	
		Now the user moves the machin
	E0553 # X(50), Y(433),	

	Z(500)	
	E0553 # X(50), Y(433), Z(520)	
	...	
		Now the client wants to stop reporting of the server and sends
00049 StopDaemon(E0553)		
	00049 &	
	E0553 # X(50), Y(433), Z(530)	
	00049 %	no events with tag E0553 may follow

6.2.5 Errors

If the server detects an error condition, it will report the error using the tag of the Command it was executing when the error was detected. In case of error severity class equal or greater 2 the server will abort all pending transactions.
In this case the client must invoke the ClearAllErrors() method before the server can continue processing commands.
Further details regarding error handling are given in Section 8.

6.3 Method Syntax

The reference for this description is the C++ class definition that is part of this documentation. Please note that in the class description the first argument of all methods is Tag. This argument is converted into a CommandTag or EventTag as described before and is therefore not part of this documentation (see Server::FormatTag() method).

6.3.1 Server Methods

A session defines the time period after the client has sent a StartSession() until the client sends an EndSession() to the server.
Several states are preserved when the server is shut down, e.g. the active tool.
If no session is active, the server will accept only StartSession() and EndSession() commands.
If a Session is active and a StartSession is received an error is generated (501, "Unsupported command").
If an EndSession is received while no session is active, this command will do nothing.
This handling will guarantee that sending an EndSession() followed by a StartSession will start a new session in any case.

6.3.1.1 StartSession()

After having completed the connection between client and server on the TCP/IP level (see section 9.2) the StartSession method initiates the connection between client and server. The server can be sure that the client will invoke StartSession() only once during a session.

- StartSession()

Parameters	None.
Data	None.
Errors	None.
Remarks	The server may for example use this method to perform initial checks Like which tool is active, …

The method does not perform any initializations, which means that the server is in a state that was left after power up or in a state that was left over from the previous session. The client can be sure that no events or daemons are pending from the session before.
During StartSession() the default arguments for
OnPtMeasReport is set to (X(),Y(),Z())
OnScanReport is set to (X(),Y(),Z(),Q()).

6.3.1.2 EndSession()

The client invokes this method to end a session between client and server.
The client must close the TCP/IP connection (see section 9.3) after the transaction is complete.

- EndSession()

Parameters	The method has no parameters.
Data	None.
Errors	No errors are returned.
Remarks	The method must make sure that all daemons are stopped and no events are sent after it completes. The following states of the server are preserved upon connection of the next client: Active tool Active coordinate system

6.3.1.3 StopDaemon(..)

The client invokes this method to stop a daemon identified by its EventTag.

- StopDaemon(EventTag)

Parameters	EventTag of daemon to be stopped.
Data	None.
Errors	0513: Daemon Does Not Exist.

6.3.1.4 StopAllDaemons()

The client invokes this method to stop all daemons.

- StopAllDaemons()

Parameters	None.
Data	None.
Errors	None.
Remarks	The method must make sure that all daemons are stopped and no events are sent after it completes.

6.3.1.5 AbortE()

The client invokes this method to abort all pending transactions and if possible the current one.

- AbortE()

Parameters	None.
Data	None.
Errors	None.
Remarks	The client must invoke the ClearAllErrors() method before the server will process new methods. On receiving an AbortE command, the server must: (a) stop all motion as soon as possible, (b) stop executing any currently executing commands, (c) not start any pending commands (those for which an Ack has been sent but for which execution has not yet started), and (d) stop sending data responses for any currently executing commands.

For currently executing commands, the server must send either a TransactionComplete (for all event commands and any other commands that are completed) or an error "Transaction aborted" for non-event commands that are not complete. For pending commands, the server must send an error "Transaction aborted".
The AbortE command itself is not to be reported complete until the responses just described have been sent. After sending an AbortE command, the client must not send any other commands until a TransactionComplete has been received in response to the AbortE. The next command sent by the client must be a ClearAllErrors command. If the server receives any other command following an AbortE, it must send an error response using error 0514 "Use ClearAllErrors to continue".

6.3.1.6 GetErrorInfo(..)

The client invokes this method to retrieve the error-information stored in the server.

- GetErrorInfo(..)

Parameters Error-Number.
Data String
Errors None.

6.3.1.7 ClearAllErrors()

The client invokes this method to enable the server to recover from an error.

- ClearAllErrors()

Parameters None.
Data None.
Errors None.

Examples

Client to Server	Server to Client	Comment
00051 GoTo(X(1000))		
	00051 &	
00052 GoTo(Y(300))		
	00052 &	
		The client wants to abort the moves and sends
E0053 AbortE()		
	E0053 &	
	00051 ! Error(2,0006,GoTo,“Transaction aborted”)	
	00051 %	
	00052 !	

	Error(2,0006,GoTo,“Transaction aborted”)	
	00052 %	
	E0053 %	
		If the client now sends
00054 Get(X())		
	00054 &	
	00054 ! Error(2,0511,Get, “Error processing method”)	
	00054 ! Error(2,0514,Get, “Use clear all errors to continue”)	
	00054 %	the server will still be in an error state
00055 ClearAllErrors()		
	00055 &	
	00055 %	the server is now ready to accept new method calls
00056 Get(X())		
	00056 &	
	00056 # X(23)	
	00056 %	

6.3.1.8 Information for handling properties

Each object of the system has to provide functionality to support the following functions.
- GetProp(), GetPropE()
- SetProp()
- EnumProp(), EnumAllProp()

6.3.1.9 GetProp(..)

The client uses this method to query settable properties of the system. F.I. speed, but not Speed.Max…

- GetProp(..)

Parameters The argument list is an enumeration of one or more of the following methods.

Tool.PtMeasPar.Speed()
Tool.GoToPar.Accel()
or other methods that return properties.

Data The format is defined by the method enumerated.
Errors Errors of the enumerated methods.

6.3.1.10 GetPropE(..)

GetPropE is handled with a high priority. See GetProp().

6.3.1.11 SetProp(..)

The client uses this method to set properties of the system.

- SetProp(..)

Parameters The argument list is an enumeration of one or more of the following methods.

Tool.PtMeasPar.Speed(100)
Tool.GoToPar.Accel(10)
or other methods that set properties.

Data None
Errors Errors of the enumerated methods.
If a value is out of range the defined warning 0504 must be returned.

6.3.1.12 EnumProp(..)

The client uses this method to query properties of the system. It returns the name of the type of a property.

- EnumProp(..)

Parameters A pointer to an object, e.g. parameter block.

Tool.PtMeasPar()
Tool.GoToPar()

Data Returns the names of all values
The client can use the type information provided to check,
if the returned name is a value or a property.
The property type is returned
"Number"
"String"
"Property" ! Means class which has own properties
See example chapter 7.7.

Errors Errors of the enumerated methods.

6.3.1.13 EnumAllProp(..)

The client uses this method to query properties of the system. It returns the names and types of the immediate children of a property.

- EnumAllProp(..)

Parameters A pointer to an object, e.g. parameter block.

Tool()

Data Returns the names of all values and the names of all child properties of the property.
The client can use the type information provided to check,
if the returned name is a value or a property.
The property type is returned
"Number"
"String"
"Property"
See example chapter 7.8.

Errors Errors of the enumerated methods.

6.3.1.14 GetDMEVersion()

The client uses this method to query the version number of the DME spec implemented by the server.

- GetDMEVersion()

Parameters None
Data DMEVersion(DMEVersion)
Errors 0501 Unsupported command

Remarks This command is defined first in DME spec 1.4. So implementations based on previous specs will react on this command by 0501 Unsupported command. If the client gets this result on that command, checked by tag, it can try to proceed by ClearAllErrors… and the different and reduced functionality of older specs and implementations.

Examples

Client to Server	Server to Client	Comment
00051 GetDMEVersion()		
	00051 &	
	00051 DMEVersion(1.4)	
	00051 %	

6.3.2 DME Methods

6.3.2.1 Home()

The client uses this method to home the machine. The server must be homed before the client can invoke methods that move the machine.
When the home command is executed, the server will move the machine to its home position.
The home position for a given machine is specific to the machine and is implementation dependent.
The home position for a given machine is fixed. Any type of in-range axis motion may occur during execution of Home. The only requirement is that the final position be the home position.

- Home()

Parameters	None.
Data	None.
Errors	1005: Error During Home.

6.3.2.2 IsHomed()

The client uses this method to query if all necessary machine axes are homed.

- IsHomed()

Parameters	None.		
Data	IsHomed(Bool).		
	Bool	= 0	not homed
	Bool	= 1	is homed
Errors	None.		
Remark			

6.3.2.3 EnableUser()

The client uses this method to enable user interaction with the machine.

- EnableUser()

Parameters	None.
Data	None.
Errors	None.
Remarks	The method will have arguments in the next version to allow the client to enable only a subset of the user interface elements like specific keys or joysticks only.

6.3.2.4 DisableUser()

The client uses this method to disable user interaction with the machine.

- DisableUser()

Parameters None.
Data None.
Errors None.
Remarks The server calls this method implicitly whenever the client calls a method that physically moves the machine.

6.3.2.5 IsUserEnabled()

The client uses this method to query if the user is enabled.

- IsUserEnabled()

Parameters None.
Data IsUserEnabled(Bool).
Bool = 0 user is disabled
Bool = 1 user is enabled
Errors None.
Remarks The client should check if the user is enabled after each StartSession() and not rely on a default.

6.3.2.6 OnPtMeasReport(..)

The client uses this method to define which information the server should send to the client when the server has completed the PtMeas command.

- OnPtMeasReport (..)

Parameters The enumeration may not be empty.
See parameters used at command Get() , section 6.3.2.11. In addition to the arguments allowed at "Get(..)" command, also IJK() and EffectiveToolRad() are possible. Please notice that this property is not a static value of the Tool. It depends on the actual circumstances of the actual measurement (probing direction …).
Data None.
Errors 0510: Bad Property .
Remarks The server will send a report after the PtMeas command has completed.
The results of a PtMeas are defined by the last OnPtMeasReport command and have the tag of the related PtMeas command.
If no OnPtMeasReport is set in the current session the server has to use the default (see StartSession).

6.3.2.7 OnMoveReportE(..)

This is a command for the Fast Queue!
The client uses this method to define which information the server should send to the client while the machine is moving by starting a daemon.

- OnMoveReportE (..)

Parameters Time(s), Dis(d), …
See parameters used at command Get() , section 6.3.2.11.

Data None.
Errors 0510: Bad Property.
0515: Daemon already exists
Remarks The server will send a report if the time interval s has elapsed or the machine has moved more than d millimeters, and in any case the numbers of responses per second must not exceed 10.
The value of Time must not be less than 0.1.
The client has the responsibility to end the OnMoveReport by a StopDaemon() or StopAllDaemon before starting a new one.
The multiple responds of an OnMoveReportE are returned with the tag of the valid OnMoveReportE command, because it is established by a daemon.

Example OnMoveReportE(Time(0.5), Dis(0.2), X(), Y(), Z())

6.3.2.8 GetMachineClass()

The client uses this method to query the type of machine.

- GetMachineClass()

Parameters None.

Data One of the following must be returned:
GetMachineClass("CartCMM")
GetMachineClass("CartCMMWithRotaryTable")

Errors None .

6.3.2.9 GetErrStatusE()

This is a command for the Fast Queue!
The client uses this method to query the error status of the server.

- GetErrStatusE()

Parameters None.
Data ErrStatus(Bool).

Bool	= 1	in error
Bool	= 0	ok

Errors None .

6.3.2.10 GetXtdErrStatus()

The client uses this method to query the extended error status of the server.

- GetXtdErrStatus()

Parameters None.
Data The server may send one or more lines of status information like

IsHomed(1)
IsUserEnabled(0)
…
as well as one or more Errors like
1009: Air Pressure Out Of Range
0512: No Daemons Are Active.

Errors None

6.3.2.11 Get(..)

The client uses this method to query the position of the active tool. Also temperatures and calibrated tool properties can be requested.

- Get(..)

Parameters The argument list is an enumeration of one or more of the following methods.

X()
Y()
Z()
Tool.A()

or other methods that return axis information. Also temperatures and other dynamic properties of the system can be requested.

Data The format is defined by the method enumerated.
Errors Errors of the enumerated methods.
Remarks The parameters request able with "Get" cannot be set directly.

6.3.2.12 GoTo(..)

The client uses this method to perform a multi axis move to the target position using the active tool.

- GoTo(..)

Parameters The argument list is an enumeration of one or more of the following methods.

X(..)
Y(..)
Z(..)

Or methods that change tool properties (like Tool.A(), Tool.B()).

Data None
Errors Errors of the enumerated methods.
Implicit Tool.GoToPar
Remarks The server will move the machine, so that all axes enumerated will start to move at the same time. The movement is controlled by the Tool.GoToPar block (Speed, Acceleration) if possible. The ready will be send when the last axis reaches it target position.
Sets implicitly DisableUser(). This mode is active until it is ended by an explicit EnableUser() command or an error.

If any of X(), Y(), Z(), Tool.A()… is not included as an argument, its value after the GoTo() is executed must be the same as its value just before the GoTo() was executed. If possible the DME has to use the current nominal value of the controller to prevent drifting by multiple usage.

6.3.2.13 PtMeas(..)

The client uses this method to execute a single point measurement using the active tool. Parameters necessary (Speed, Approach distance, ..) are defined by the active tool

- PtMeas(..)

Parameters The argument list is an enumeration of one or more of the following methods.

X(..)
Y(..)
Z(..)
IJK(..)

Data As defined by OnPtMeasReport() method
Errors 1006: Surface Not Found.
Implicit Tool.PtMeasPar
Tool.GoToPar
Remarks The PtMeas() method is processed by the server as follows:

If an IJK vector is present

- The vector I, J, K is normalized
- A new position is found by moving in the I,J,K direction from the X,Y,Z nominal position by the following values:

Part.Approach()
Tool.Approach()
Tool.Radius() (in the drawing assumed zero)

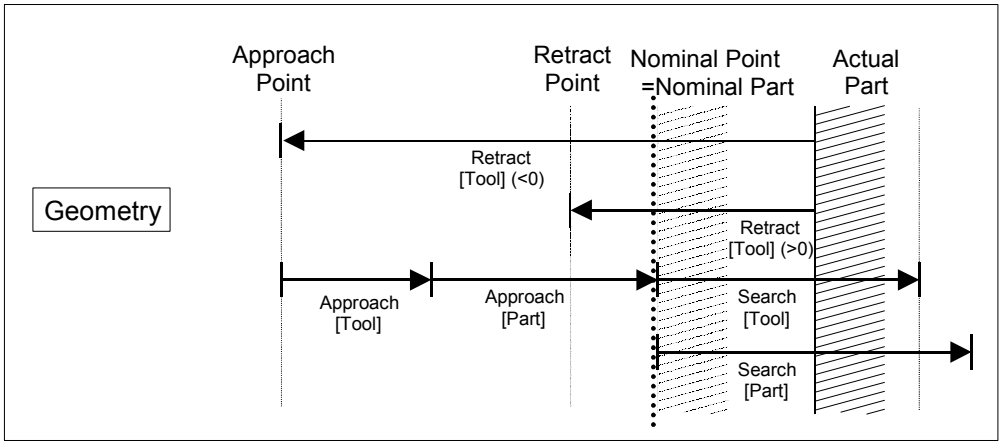

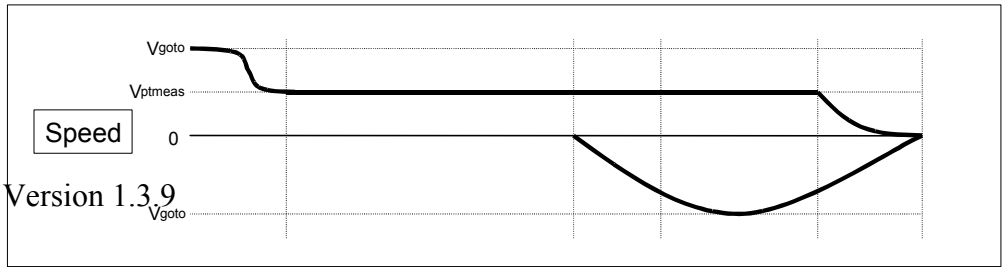

This new position is called approach position.

- The server moves the machine to the approach position. This move is executed like an implicit GoTo().
- Another new position is found by moving from the X,Y,Z nominal position opposite the I,J,K direction by the value of Tool.Search(). This position is called the end of search position.
- The server moves the machine towards the end of search position using the PtMeasPar of the Tool().
- If the tool has part contact during this move the server latches the position of the center of the ActTool and reports to the client as defined by OnPtMeasReport().
- After contact the server will move the machine according to the value of Tool.Retract() using Tool.GoToPar for the move.
  If Tool.Retract() is greater or equal zero, the server will shift the contact position in the IJK direction by this value and move the machine to this position. If the Tool.Retract() is less than zero, the server will move back to the approach position as defined before.

If an IJK vector is not set by this command

- The I, J, K vector is defined as the direction from the nominal point X, Y, Z to the last position before invoking this method. F.I. the position of the last GoTo command.
- The following procedure is executed as if the I, J, K, was given by the client. See above.

Note that the end of search position may be outside the move limits, but the part surface inside. In this case the server will report success if the surface is still inside or ErrorMoveOutOfLimits. This behavior differs from the GoTo() method.
If any of X(), Y(), Z()… is not included as an argument, its value after the PtMeas() is executed must be the same as its value just before the PtMeas() was executed. If possible the DME has to use the current nominal value of the controller to prevent drifting by multiple usage.
The argument IJK(..) without any linear axis coordinates is currently not allowed.
Sets implicitly DisableUser().

6.3.2.14 Information for Tool Handling

To handle special tool behaviors the following tools are defined (predefined, reserved names)

BaseTool	! Holds the default DME capabilities, e.g. speed, acceleration. It is not visible when using EnumTools().
RefTool	! Supports all standard tool properties
NoTool	! Can only move but not measure

UnDefTool ! It is also not visible by EnumTools().

6.3.2.15 Tool()

The client uses this method to select a pointer to the actual activated tool. It can also be used as a pointer to NoTool! See Example 7.6.

- Tool()

Parameters None.
Data None.
Errors

6.3.2.16 FindTool(..)

The client uses this method to get a pointer to a tool with a known name. See Example 7.7.

- FindTool("Too1")

Parameters Name of tool to search for.
Data No data are direct returned, but after using this command the pointer FoundTool is usable. See FoundTool chapter 6.3.2.17 and example 7.7.
Errors 1502: Tool Not Found. (FoundTool.Name("UnDefTool"))

6.3.2.17 FoundTool()

This method acts as a pointer to a tool with a known name selected by FindTool("xxx"). FoundTool() is only valid after a call to FindTool(), otherwise it is "UnDefTool". See Example 7.7.

- FoundTool()

Parameters None.
Data None.
Errors 1503, "Tool not defined"
Remark Pointer can also be NoTool!

6.3.2.18 ChangeTool(..)

The client uses this method to change the tool by ProbeChanger or manually.

- ChangeTool("Tool2")

Parameters Name of the tool to activate.
Data None.
Errors 1502: Tool Not Found.
Remark If an error occurs during the execution of ChangeTool(), the client is responsible to ask the server which tool is active then.

6.3.2.19 SetTool(..)

The client uses this method to force the server to assume a given tool is the active tool.

- SetTool("Tool2")

Parameters	Name of the tool to set.
Data	None.
Errors	1502: Tool Not Found.
Remark	If an error occurs during the execution of SetTool(), the client is responsible to ask the server which tool is active then.

The server assumes the active tool is "Tool2".

6.3.2.20 AlignTool(..)

The client uses this method to force the tool to orientate according to the given vector(s).

- AlignTool(i1,j1,k1, alpha)
- AlignTool(i1,j1,k1,i2,j2,k2, alpha, beta)

Parameters	One normalized vector (i1, j1, k1). This vector is anti parallel to the main axis of the tool (away from the surface). Two normalized vectors (i1, j1, k1, i2, j2, k2). The first vector is anti parallel to the main axis of the tool (away from the surface). The second vector describes the orientation in the working plane. Maximal allowed error angles (alpha, beta) in which the found orientation may differ from the desired one. In case the angle differs, ToolNotFound is returned. In case alpha or beta are zero no error check is performed.
Data	Returns vectors (same number as set) which describe the reached alignment.
Errors	1502: Tool Not Found.
Remark	Each tool must implement its own primary (main axis) and secondary alignment direction. After executing AlignTool the primary direction of the tool is anti parallel to (i1,j1,k1) and the secondary direction is parallel to (i2,j2,k2).

6.3.2.21 GoToPar()

This method acts as a pointer to the GoToParameter block of the DME.

- GoToPar()

Parameters	None.
Data	pointer.
Errors	None.

Remark

6.3.2.22 PtMeasPar()

This method acts as a pointer to the PtMeasParameter block of the DME.

- PtMeasPar()

Parameters None.
Data pointer.
Errors None.
Remark

6.3.2.23 EnumTools()

The client uses this method to query the names of the available tools (manually or automatically). It returns a list of names.

- EnumTools()

Parameters None
Data Returns the names of all values. F.I.:
00014 &
00014 “RefTool”
00014 “NoTool”
00014 “NormalTool”
00014 “Conf1.Tip1”
00014 “Conf1.Tip2”
…
00014 “SpecialTool”
00014 %
Errors

6.3.2.24 Q()

The client uses this property to query the quality of a measurement.

- Q()

Parameters None.
Data Q(q).
Errors 1503: Tool Not Defined
0509: Bad Parameter
Remarks This method can only be invoked as an argument of a OnReport method.
The Q() property is a numeric value between 0 and 100 indicating the “quality” of the measured point. A value of 0 defines a “good” point. Depending on the tool used to scan, values from 1 to 100 indicate a lower quality and reliability of the points. A value of 100 marks bad points.

If points are out of the tools measuring range, the DME may decide to flag them as "bad points" or stop the scan with an error.

6.3.2.25 ER()

The client uses this property to query the effective tool radius actual during a measurement.

- ER()

Parameters	None.
Data	ER(EffectiveToolRad).
Errors	0509: Bad Parameter
Remarks	This method can only be invoked as an argument of a OnReport method. Please notice that this property is not a static value of the Tool. It depends on the actual circumstances of the actual measurement (probing direction …).

6.3.2.26 GetChangeToolAction(..)

The client uses this method to query the necessary movement to change to the defined tool. This method can be used to get an information what action has to be done and what distance will be moved to get a the specified tool.

- GetChangeToolAction("Tool2")

Parameters	Name of the tool to activate.
Data	ChangeToolAction(Arg,X(),Y(),Z()) Arg can be : Switch Rotate MoveAuto MoveMan.
Errors	1502: Tool Not Found.
Remark	Switch : The change to the new tool can be done without a physically movement of the machine. This means the change can be done by "switching" to another tip or by using another internal property (f.I. set by calibration, force…) The X(),Y(),Z() describe the distance from the actual tool to the new one in the selected coordinate system. This distance is identical to the offset the machine will return executing a "Get" command twice with the actual tool and with the new tool. When only an internal property is switched this vector is (0,0,0). Rotate: The change can be done by rotating to another angle combination of the rotating head. The X(),Y(),Z() describe the distance from the actual tool to the new one in the selected coordinate system. This distance is identical to the offset the machine will return executing a "Get" command with the actual tool and with the new tool.

MoveAuto: The tool can be changed automatically by moving the machine f.I. to a probe changer rack. The X(),Y(),Z() describe the check in position for the probe changing device in the selected coordinate system. Using this information, the client is responsible to generate a path (if necessary by additional GoTos) to a point, from which this check in point is reachable collision free. Executing the ChangeTool command, the DME server generates an implicit GoTo to that check in position and is then responsible for the movements during the probe change. This means from the check in point to the destination of the actual tool and to the position of the new probe. After picking up the new tool and moving to the check out position the ChangeTool command is finished. The client has to query for the actual position and to generate the following path.

MoveMan: The tool cannot be changed automatically. User interaction is necessary. The X(),Y(),Z() describe the check in position where the manual probe changing should happen in the selected coordinate system. Using this information, the client is responsible to generate a path (if necessary by additional GoTos) to a point, from which the check in position (manual tool changing point) is reachable collision free. Executing the ChangeTool command, the DME server generates an implicit GoTo to that check in position and is then responsible for the user dialog of the tool change. After picking up the new tool the ChangeTool command is finished. The client has to query for the actual position and to generate the following path.

6.3.3 CartCMM Methods

Each CartCMM implements a cartesian machine coordinate system.
Based on this coordinate system the following depend on it:

MachineCsy
MoveableMachineCsy
MultipleArmCsy
PartCsy

The multiple arm transformation is implemented also on bridge type or single arm machines.
* The RotaryTableCsy (handling rotary table) and the MoveableMachineCsy (handling movable measurement equipment, mechanical or optical) are listed here because of consistency reasons of the transformation chain.

Picture 21: Transformation chain model

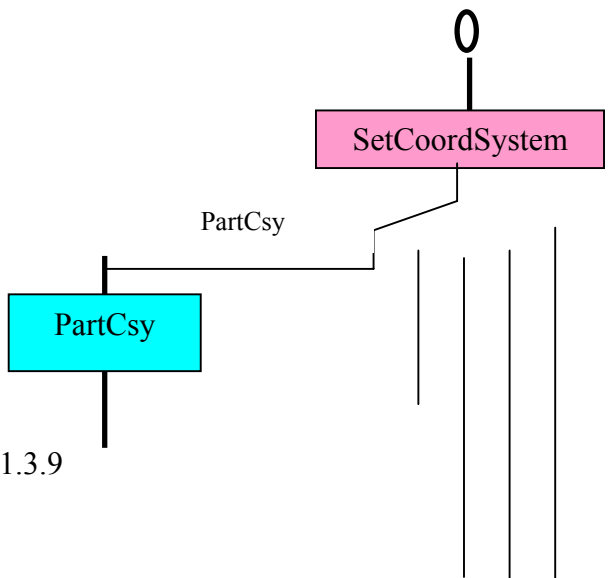

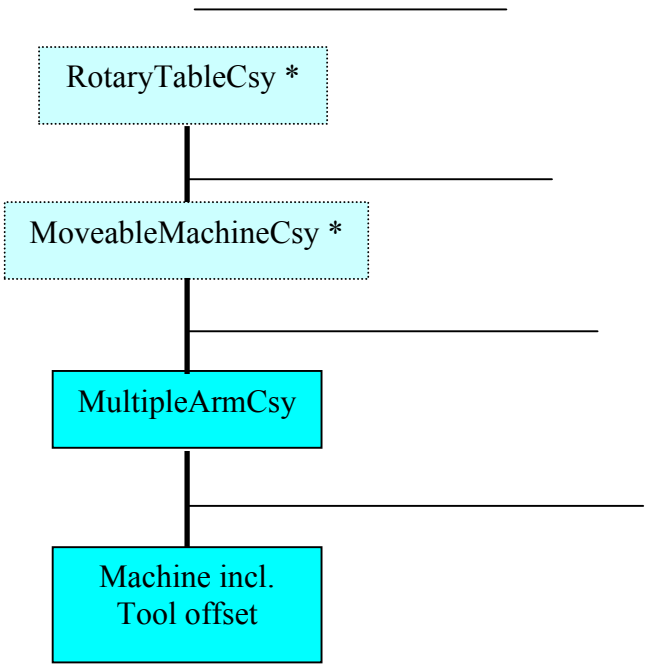

As example the transformation of a point in machine coordinates (x, y, z) to a point in multiple arm coordinates (x',y',z') is calculated as follows.

$$\begin{pmatrix} x' \\ y' \\ z' \end{pmatrix} = \begin{pmatrix} m11 & m12 & m13 \\ m21 & m22 & m23 \\ m31 & m32 & m33 \end{pmatrix} \begin{pmatrix} x - x0 \\ y - y0 \\ z - z0 \end{pmatrix}$$

In this example x0, y0, z0 and the coefficients m11 ... m33 are calculated as follows from the arguments of the SetCsyTransform(MultipleArmCsy, X0, Y0, Z0, Theta, Psi, Phi)

To create the Euler Angles Theta, Phi, Psi and vice versa the rotation matrix see Appendix A.4.2.

6.3.3.1 SetCoordSystem(..)

The client uses this method to select the coordinate system it wants to work with.

- SetCoordSystem(..)

Parameters	One of the following: MachineCsy MoveableMachineCsy MultipleArmCsy PartCsy.
Data	None.
Errors	0509: Bad Parameter.
Remarks	The parameters are considered to be enums and must not be enclosed in double quotes.

6.3.3.2 GetCoordSystem()

The client uses this method to query the server which coordinate system is selected..

- GetCoordSystem()

Parameters None.
Data CoordSystem(Arg).
Arg can be one of the following:
MachineCsy
MoveableMachineCsy
MultipleArmCsy
PartCsy.
Errors None.

6.3.3.3 GetCsyTransformation(..)

The client uses this method to get the enumerated coordinate transformation back from the server.

- GetCsyTransformation(Enumerator)

Parameters Enumerator: PartCsy
JogDisplayCsy
JogMoveCsy
SensorCsy
MoveableMachineCsy
MultipleArmCsy.

Data GetCsyTransformation(X0, Y0, Z0, Theta, Psi, Phi).
Errors None.
Remarks The definition of the relation between transformation matrix and parameters is given in the C++ class definition. See Appendix A.4.2.

6.3.3.4 SetCsyTransformation(..)

The client uses this method to replace the enumerated coordinate transformation.

- SetCsyTransformation(Enumerator, X0,Y0,Z0, Theta, Psi, Phi)

Parameters Enumerator: PartCsy
JogDisplayCsy
JogMoveCsy
SensorCsy
MoveableMachineCsy
MultipleArmCsy.

X0, Y0, Z0 define the zero point of the machine coordinate system in part coordinates. Theta, Psi and Phi are Euler angles that define the rotation matrix of the transformation.
Data None.
Errors 1007: Theta Out Of Range.
Remarks See Section 10.4.2. Theta must be in the range of 0..180 degrees. Psi and Phi should be normalized (modulo 360) by the server.

6.3.3.5 X()

- X()

Parameters None.
Data X(x).
Errors 1503: Tool Not Defined
0509: Bad Parameter.
Remarks This method can only be invoked as an argument of a Get or OnReport method.

6.3.3.6 Y()

- Y()

Parameters None.
Data Y(y).
Errors 1503: Tool Not Defined
0509: Bad Parameter.
Remarks This method can only be invoked as an argument of a Get or OnReport method.

6.3.3.7 Z()

- Z()

Parameters None.
Data Z(z).
Errors 1503: Tool Not Defined
0509: Bad Parameter.
Remarks This method can only be invoked as an argument of a Get or OnReport method.

6.3.3.8 IJK()

- IJK()

Parameters None.
Data IJK(i,j,k).
Errors 0508: Bad Context.

Remarks i,j,k define a direction vector in the actual coordinate system. The vector is not necessarily normalized. Its values are tool dependent. If the client normalizes the vector it should point out of the part material.
This method can only be invoked as an argument of OnPtMeasReport().

6.3.3.9 X(..)

- X(x)

Parameters target x position.

Data	None. …
Errors	2500: Machine Limit Encountered 2504: Collision 0508: Bad Context.
Implicit	Tool.GoToPar
Remarks	This method can only be invoked as an argument of a GoTo or PtMeas method. If the server detects a MoveOutOfLimits condition, the machine will not move.

6.3.3.10 Y(..)

- Y(y)

Parameters	target y position.
Data	None. …
Errors	2500: Machine Limit Encountered 2504: Collision 0508: Bad Context.
Implicit	Tool.GoToPar
Remarks	This method can only be invoked as an argument of a GoTo or PtMeas method. If the server detects a MoveOutOfLimits condition, the machine will not move.

6.3.3.11 Z(..)

- Z(z)

Parameters	target z position.
Data	None. …
Errors	2500: Machine Limit Encountered 2504: Collision 0508: Bad Context.
Implicit	Tool.GoToPar
Remarks	This method can only be invoked as an argument of a GoTo or PtMeas method. If the server detects a MoveOutOfLimits condition, the machine will not move.

6.3.3.12 IJK(..)

- IJK(i,j,k)

Parameters	i,j,k define the X,Y,Z values of a vector.
Data	None.
Errors	0508: Bad Context. 1010: Vector Has No Norm.
Remarks	i,j,k define a direction vector in the actual DME coordinate system. The vector is not necessarily normalized. Before using the vector, the server must normalize it. This method can only be invoked as an argument of another method.

6.3.3.13 R()

The client uses this method to query the position of the rotary table. Implementation in CartCMMWithRotTbl.

- R()

Parameters	None.
Data	R(r).
Errors	0509: Bad Parameter.
Remarks	This method can only be invoked as an argument of a Get or OnReport method. The setting of the rotary table must be done by AlignPart!

6.3.4 ToolChanger Methods

Each CMM implements one instance of the ToolChanger class to install and change tools. The methods are available, and described here in the DME section, because there is exactly one instance.

6.3.5 Tool Methods (Instance of class KTool)

Each CMM implements a class KTool to contain the properties of the tool and the methods to handle them.

6.3.5.1 GoToPar()

This method acts as a pointer to the GoToParameter block of this instance of KTool.

- GoToPar()

Parameters	None.
Data	pointer.
Errors	None
Remark	

6.3.5.2 PtMeasPar()

This method acts as a pointer to the PtMeasParameter block of this instance of KTool.

- PtMeasPar()

Parameters	None.
Data	pointer.
Errors	None
Remark	

6.3.5.3 ReQualify()

The client uses this method to requalify ActTool.

- ReQualify()

Parameters	None, ActTool is used.
Data	None.
Errors	Error messages during calibration.
Remark	

6.3.6 GoToPar Block

Each parameter block contains information for
Speed and
Accel.
Each of these physical values is split in
Min
Max
Act (Actual) and
Def (Default).

There is the parameter-block of the active tool accessible via the DME and a parameter-block associated with each tool. The access to the parameter-blocks is described in the object model 5.9 and in the header file of toolchanger.h. The methods to access the values are described in the examples 7.7
The application cannot set the actual values outside the range defined by Min and Max values. The application cannot change Min and Max. If trying to set the actual value outside the defined range, the Max or Min value is used.

6.3.7 PtMeasPar Block

Each parameter block contains information for
Speed
Accel
Approach
Search
Retract.
Each of these is of the type parameter (see object model) and has the substructure as follows. Only the Act values can be set by the client. This is the reason for the direct access possibility.

Min
Max
Act (Actual) and
Def (Default).

There is the parameter-block of the active tool accessible via the DME and a parameter-block associated to each tool. The access to the parameter-blocks is described in the object model 5.9 and in the header file of toolchanger.h. The methods to access the values are described in the examples 7.7 and 7.8.
The application cannot set the actual values outside the range defined by Min. and Max values. The application cannot change Min and Max. If trying to set the actual value outside the defined range, the Max or Min value is used. In this case the warning number 0504 “Parameter out of range” must be returned.
The ABCGoToPar and ABCPtMeasPar are mentioned in the full object model. This is because of symmetry reasons. Because actual rotational heads cannot be controlled in that manner it is not necessary to implement this actually.

6.3.8 A(), B(), C()

The client uses this method to query one or more rotational axis of the ActTool. The reference to the rotational axis can be used single. Implementation in ToolAB or ToolABC.

- A()

Parameters	None.
Data	A().
Errors	1503: Tool Not Defined 0509: Bad Parameter.
Remarks	This method can only be invoked as an argument of a Get or OnReport method. The usage from the interface is Tool.A()… See examples chapter 7.

6.3.9 A(..), B(..), C(..)

- For internal and symmetry reasons. The setting of the rotational axis should be done by AlignTool. Only this handling guarantees compatibility between the implementations!
- A(a)

6.3.10 Name

The client uses this method to query the property name of the actual used Tool.

- Name()

Parameters	None.
Data	Name(String).
Errors	
Remarks	This method can only be invoked as an argument of a GetProp(Tool.Name()) method. Returned data can also be “UnDefTool” or NoTool”…

6.3.11 Id

The client uses this method to query Id information of the actual used Tool.

- Id()

Parameters	None.
Data	Id(String).
Errors	1503: Tool not defined
Remarks	This method can only be invoked as an argument of a GetProp(Tool.Id()) method. The returned Id is just in definition by OSIS work group 1. The Id will contain information as the manufacturer of the tool, the device class, the device type…

6.3.12 CollisionVolume

The client uses this method to query the collision protection volume of the actual used Tool. The returned volumes contain all possibly collision-causing parts of the tool. This volumes are related to the actual tool. Using a tactile probe f.I. the relation point is the center of the probing sphere. Using optical probes it is a defined point (center?) of the measuring range… Orientated Bounding Boxes (OBB) are used to contain the collision relevant structures of the tool.

- CollisionVolume()

Parameters None.

Data CollisionVolume(OBB, Cx1,Cy1,Cz1,Ex1,Ey1,Ez1,Ix1,Iy1,Iz1,
Jx1,Jy1,Jz1,Kx1,Ky1,Kz1,
….
OBB, Cxn,Cyn,Czn,Exn,Eyn,Ezn,Ixn,Iyn,Izn,
Jxn,Jyn,Jzn,Kxn,Kyn,Kzn)

Cx,Cy,Cz	is the center point of the OBB, relative to the selected tool
Ex,Ey,Ez	extension of the OBB in the direction of the following orientation vectors relative to the center
Ix,Iy,Iz	normalized orientation vector of the box
Jx,Jy,Jz	normalized orientation vector of the box
Kx,Ky,Kz	normalized orientation vector of the box

Errors 1503: Tool not defined

Remarks This method can only be invoked as an argument of a GetProp(Tool.Offset()) method. Standard definition of an Oriented Bounding Box:

Picture 22: Definition of an oriented bounding box

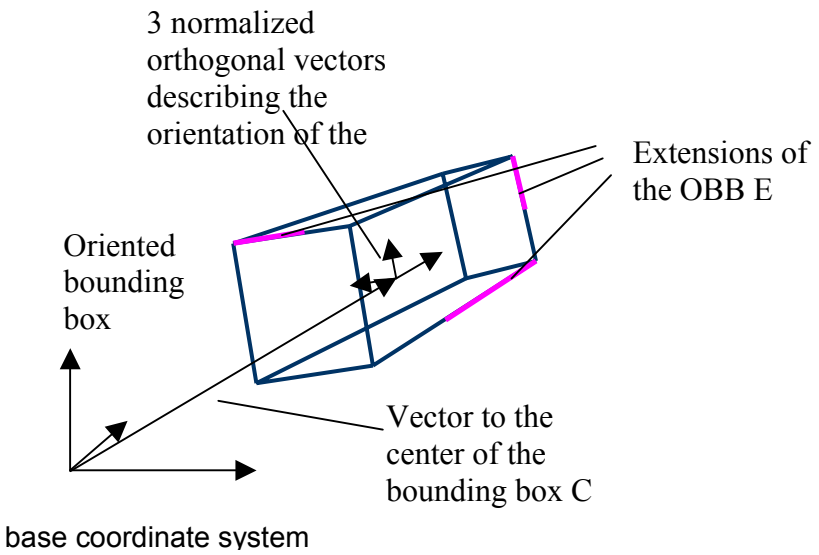

Example
Picture 23: Simple safety zones

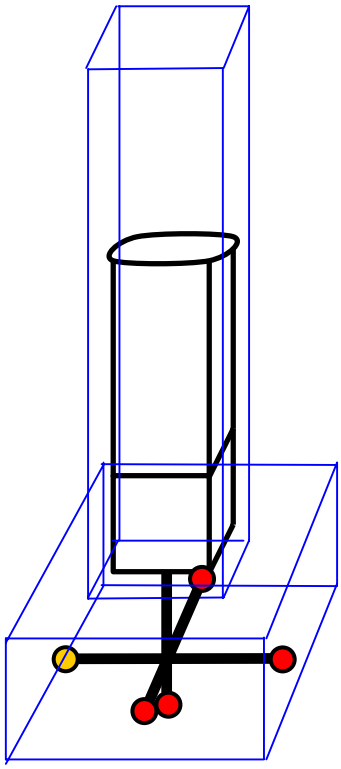

Client to Server	Server to Client	Comment
00051 GetProp(Tool.Collision Volume())		Selected tool is the yellow sphere
	00051 &	
	00051 CollisionVolume(OBB, 120.0000,10.0000,20.0000, 90.0000,95.0000,30.0000, 1.0000,0.0000,0.0000, 0.0000,1.0000,0.0000, 0.0000,0.0000,1.0000, OBB, 120.0000,10.0000,550.0000, 50.0000,50.0000,500.0000 1.0000,0.0000,0.0000, 0.0000,1.0000,0.0000, 0.0000,0.0000,1.0000)	Values ideal! center extension I J K center extension I J K
	00051 %	

Picture 24: Bounding boxes covering a rotated tool

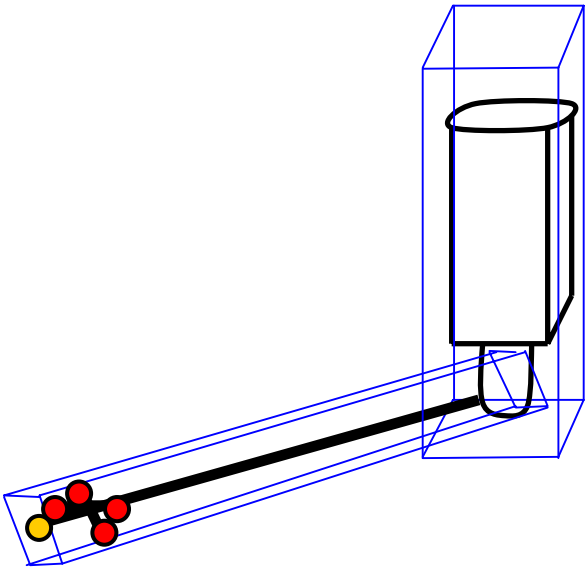

Client to Server	Server to Client	Comment
00051 GetProp(Tool.Collision Volume())		Selected tool is the yellow sphere
	00051 &	
	00051 CollisionVolume(OBB, 100.0000,30.0000,40.0000, 500.0000,15.0000,20.0000, 0.8944,0.2683,0.3578, -0.2873,0.9578,0.0000, -0.3427,-0.1027,0,9337, OBB, 150.0000,10.0000,530.0000, 50.0000,50.0000,500.0000 1.0000,0.0000,0.0000, 0.0000,1.0000,0.0000, 0.0000,0.0000,1.0000)	Values ideal! center extension I J K center extension I J K
	00051 %	

Please notice also the following example. It shows:

- It is possible and it can be useful to define one or more bounding boxes for each tip of a tactile probe.
- It can be necessary to use additional information beside the normal calibration data to define proper and sufficient bounding boxes.

Picture 25: Bounding boxes covering more complex tools

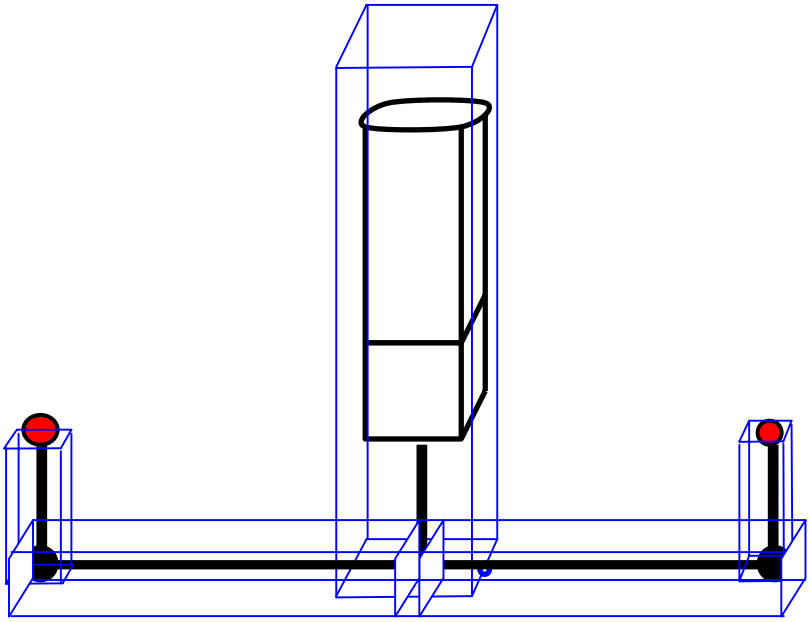

6.3.13 Alignment

The client uses this method to query the alignment of the actual used Tool. The returned vector(s) describe the actual alignment of the tool in the selected coordinate system. The vectors are defined similar as in AlignTool.

- Alignment()

Parameters	None.
Data	ToolAlignment(i1,j1,k1). ToolAlignment(i1,j1,k1,i2,j2,k2)
Errors	1503: Tool not defined 2000: Tool not calibrated
Remarks	This method can only be invoked as an argument of a GetProp(Tool.Alignment()) method. Using a tactile probe f.I. the property ToolAlignment returns the shaft direction of the active tool.

7 Additional Dialog Examples

7.1 StartSession

Client to Server	Server to Client	Comment
		Server and Client must be booted up previously
00001 StartSession		Client connects to server
	00001 &	Server sends acknowledge
	00001 %	Server sends transaction complete

7.2 Move 1 axis

Client to Server	Server to Client	Comment
00009 SetCsyTransformation(PartCsy, 10, 20,30, 0, 0, 0)		Set transformation for part coordinate system
	00009 &	
	00009 %	
00010 SetCoordSystem(PartCsy)		Select transformation to and from part coordinate system
	00010 &	
	00010 %	
00011 GoTo(X(100))		Move now in part coordinate system
	00011 &	
	00011 %	

7.3 Probe 1 axis

Client to Server	Server to Client	Comment
00014 OnPtMeasReport(X(),Y(),Z(),Tool.A())		Client defines format for probing result. Valid for every PtMeas command from now on.
	00014 &	
	00014 %	
00015 PtMeas(X(200))		Uses standard method in CartCMM
	00015 &	
	00015 # X(199.998),Y(250.123),Z(300.002),Tool.A(45)	Probing result from server
	00015 %	

7.4 Move more axes in workpiece coordinate system

Client to Server	Server to Client	Comment
00009 SetCsyTransformation(PartCsy,10, 20,30, 0, 0, 0)		Set transformation for part coordinate system
	00009 &	
	00009 %	
00010 SetCoordSystem(PartCsy)		Select transformation to part coordinate system
	00010 &	
	00010 %	
00011 Goto(X(100),Y(150),Z(200)) 00011 Goto(X(100),Y(150),Z(200),R(180))		Move with more axes Alternatively
	00011 &	
	00011 %	

7.5 Probe with more axis

Client to Server	Server to Client	Comment
00014 OnPtMeasReport(X(),Y(),Z(),Tool.A())		Valid for every PtMeas command
	00014 &	
	00014 %	
00015 PtMeas(X(200),Y(250),Z(300)) 00015 PtMeas(X(200),Y(250),Z(300),IJK(0,0,1)) 00015 PtMeas(X(200),Y(250),Z(300),IJK(0,0,1),R(180))		Uses standard method in CartCMM Alternatively, with approaching vector Alternatively, with approaching vector and rotary table
	00015 &	
	00015 # X(199.998),Y(250.123),Z(300.002),Tool.A(45)	Result
	00015 %	

7.6 Set property

Client to Server	Server to Client	Comment

00015 SetProp(Tool.PtMeasPar.Speed(100))		Set probing speed of active tool
	00015 &	
	00015 %	

7.7 Get, read property

All properties that are represented as strings are exchanged using double-quotes, e.g. “This is my probe”

Client to Server	Server to Client	Comment
00014 EnumProp(Tool.PtMeasPar())		Get ActTool’s PtMeas Property list
	00014 &	
	00014 # “Speed”, “Number”	As a method to have direct access to the actual value, internal call of Speed.Act()
	00014 # “Accel”, “Number”	
	.....	
	00014 # “Approach”, “Number”	
	00014 # “Speed”, “Property”	As a pointer to the sub structure
	00014 # “Accel”, “Property”	
	.....	
	00014 # “Approach”, “Property”	
	00014 %	
00015 GetProp(Tool.PtMeasPar.Speed(), Tool.PtMeasPar.Retract())		Request for getting active probing speed and retract of active tool
	00015 &	
	00015 # Tool.PtMeasPar.Speed(100), Tool.PtMeasPar.Retract(2.0)	
	00015 %	

00016 FindTool(“Probe1”)		Search pointer to Probe 1
	00016 &	
	00016 %	
00017 GetProp(FoundTool.PtMeasPar.Speed())		Get Probing speed of Probe1
	00017 &	
	00017 # FoundTool.PtMeasPar.Speed(100)	
	00017 %	

7.8 EnumAllProp

Client to Server	Server to Client	Comment
00014 EnumAllProp(Tool.PtMeasPar())		Get ActTool’s PtMeas Property list
	00014 &	
	00014 # “Speed”, “Number”	Internal call of Speed.Act()
	00014 # “Accel”, “Number”	
	.....	
	00014 # “Approach”, “Number”	
	00014 # “Speed.Max”, “Number”	First branch of sub tree
	00014 # “Speed.Min”, “Number”	
	00014 # “Speed.Act”, “Number”	
	00014 # “Speed.Def”, “Number”	
	.....	
	00014 %	

8 Error Handling

- Each transaction can generate multiple error messages.
- These messages are headed by the same tag number.

8.1 Classification of Errors

F1 :== (see 6.1.4.2)
F2 :== (see 6.1.4.2)
F3 :== (see 6.1.4.2)
Text :== (see 6.1.4.2)

ErrorResponse :== (see 6.1.4.2)

Tag ! Error(F1, F2, F3, Text)

F1: Error severity classification
0: Info
1: Warning
2: Error, client should be able to repair the error
3: Error, user interaction necessary
9: Fatal server error
Only errors with classification higher or equal 2 require ClearAllErrors().

F2: Error numbers, 0000-4999 defined by I++ DME
5000-5999 reserved for optical systems (OSIS)
5000-7999 reserved
8000-8999 definable from server
9000-9999 definable from client

F3: I++ recommends to serve here the name of the error causing method. This means the name of the function in the server implementation that reported the error.

Text: The text string must be the text string shown in section 8.2 for the error number given in the F2 field.

8.2 List of I++ predefined errors

Classification in Field F2
0000-0499 Protocol, syntax error
0500-0999 Error generated during execution in DME (see object model)
1000-1499 Error generated during execution in CartCMM... (see object model)
1500-1999 Error generated during execution in ToolChanger (see object model)
2000-2499 Error generated during execution in Tool... (see object model)

2500-2999 Error generated during execution in Axis (see object model)

Defined errors:

Severity class	Error No.	Text
0	0000	Buffer full
2	0001	Illegal tag
2	0002	No space at pos. 6
2	0003	Reserved
2	0004	Reserved
2	0005	Reserved
2	0006	Transaction aborted (Use ClearAllErrors To Continue)
3	0007	Illegal character
3	0008	Protocol error
3	0500	Emergency stop
3	0501	Unsupported command
3	0502	Incorrect arguments
9	0503	Controller communications failure
1	0504	Argument out of range
3	0505	Argument not recognized
3	0506	Argument not supported
3	0507	Illegal command
3	0508	Bad context
3	0509	Bad argument
3	0510	Bad property
3	0511	Error processing method
1	0512	No daemons are active
2	0513	Daemon does not exist
2	0514	Use ClearAllErrors to continue
2	0515	Daemon already exists
3	1000	Machine in error state
2	1001	Illegal touch
9	1002	Axis does not exist
2	1003	No touch
9	1004	Number of angles not supported on current device
3	1005	Error during home
2	1006	Surface not found
3	1007	Theta out of range
3	1008	Target position out of machine volume
3	1009	Air pressure out of range
2	1010	Vector has no norm
3	1500	Failed to re-seat head
3	1501	Probe not armed
3	1502	Tool not found
3	1503	Tool not defined
3	2000	Tool not calibrated
2	2001	Head error excessive force
3	2002	Type of probe does not allow this operation
3	2500	Machine limit encountered [Move Out Of Limits]
3	2501	Axis not active
3	2502	Axis position error
9	2503	Scale read head failure
3	2504	Collision
2	2505	Specified angle out of range
2	2506	Part not aligned

9 Miscellaneous Information

9.1 Coordination of company related extensions

To allow coordinated development of the different companies, based on the common functionality covered by the actual specification, specific name spaces are reserved.
Company specific extensions can be applied to public methods and properties of the server by the following mechanism:
Commands in Class DME beginning with
BS. Are Brown&Sharpe proprietary
CZ. Are Carl Zeiss proprietary
WP. Are Wenzel Präzision proprietary
MI. Are Mitutoyo proprietary
RW. Are Renishaw proprietary
MW. Are Messtechnik Wetzlar proprietary
XX. Are company short terms…
Functionality in this extensions having a common interest will be standardized in an upcoming release, which specifically addresses this functionality. Target is approx. one year after a successful implementation.

The handling of properties is done in the same way
SetProp(XX....)
GetProp(XX....) is XX company proprietary.
Additional short terms can be requested from the I++ DME team.

9.2 Initialization of TCP/IP protocol-stack

After CMM power up the server will create the application port in listen mode.
When the client is started, it will send a connection request to the application port created by the server. The server will confirm the connection and is now ready to work with the client.

9.3 Closing TCP/IP connection

When the client no longer needs the server it will close the connection.
The driver will then listen on the application port for new incoming connection requests.

9.4 EndSession and StartSession

After re-starting a session all previous defined properties are valid again.

9.5 Pre-defined Server events

The following server events are predefined. Please note that all these events are transmitted with tag number E0000 to the client.

9.5.1 KeyPress

Data KeyPress(“NameOfKey”)

Remarks The server sends this event, if the user is enabled and when the user has pushed button on the jog box.

9.5.2 Clearance or intermediate point set

Data GoTo(…)

Remarks The server sends this event, if the user is enabled and when the user has pushed the “Clearance Point” button on the jog box.
The GoTo format is defined by OnPtMeasReport(). If vectors are defined they have to be set to IJK(0,0,0)

9.5.3 Pick manual point

Data PtMeas(…)

Remarks The server sends this event, if the user is enabled and when the user manually picked a point.
The PtMeas format is defined by OnPtMeasReport().

9.5.4 Change Tool request

Data ChangeTool(“ToolName”)

Remarks The server sends this event, if the user is enabled and when the user has pushed a button on the jog box that selects a new tool.
This event is only a request. The client has to decide if it should send a ChangeTool() command to execute the change.
Note that this command does not change the tool.

9.5.5 Set property request

Data SetProp()

Remarks The server sends this event, if the user is enabled and when the user has pushed a button on the jog box that changes a property.
This event is only a request. The client has to decide if it should send a SetProp() command to execute the change.
Note that this command does not change the property.

9.5.6 Additional defined keys

The following NameOfKeys are additional defined:
“Done” // signals an operation should be finished
“Del” // delete a function call or a measured point…
“F1” … “Fn” // key code of soft keys

9.6 Reading part temperature

In the appended c++ header files, the temperature is a property of the class part. This is actual not public, but will become in further revisions. The access will be by GetProp(Part.Temperature)

10 Multiple arm support

Picture 22: Multiple arm equipment

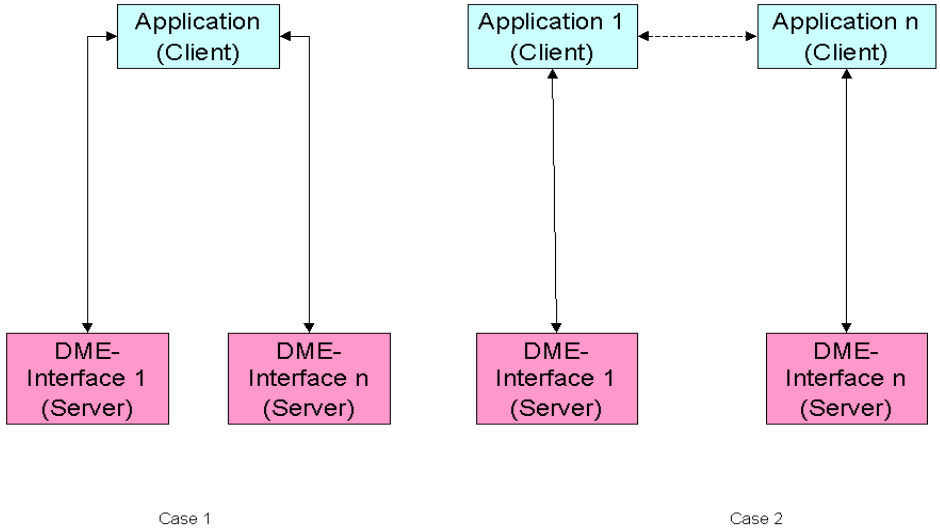

- For each column a single I++ DME interface is required.
- The disposition of a feature to be measured on a specific column, the synchronization of the columns (including collision detection between the columns) and the combination of the results is part of the application task.
- The vendor of the multiple arm system has to provide an application to build the coupling transformation. This can be a stand-alone application or an integrated part of the DME interface.
- The following commands are used to set and get these transformations SetCsyTransformation(MultipleArmCsy,.....), GetCsyTransformation(MultipleArmCsy)

A coupling tool is used to define the multiple arm coordinate system for each column. The coupling tool may be a special tool or the application itself.
The coupling tool measures an artifact to calculate the MultipleArmCsy. The sequence of the measurement is as follows.

- The coupling tool measures the artifact using column 1.
- The coupling tool measures the artifact using column 2.
- The coupling tool calculates the 2 transformations used for column 1 and 2.
- The coupling tool sends the transformation for column 1 using a SetCsyTransformation(MultipleArmCsy,.....) command to DME of column 1.
- The coupling tool sends the transformation for column 2 using a SetCsyTransformation(MultipleArmCsy,.....) command to DME of column 2.

11 Scanning

11.1 Preliminaries

11.1.1 Hints:

- Hints are used to communicate properties of the part to the DME.
- The only use for Hints is to optimize the execution of a measuring process.
- Hints are not mandatory; the DME must be able to execute without the interpretation of a given hint.

The definition of the scanning commands is independent of the type of sensor, F.E. tactile, measuring. Tactile sensors may emulate the functionality of measuring sensors. The algorithm is not part of the spec.

11.1.2 OnScanReport(..)

Defines properties reported while scanning.

➢ OnScanReport(..)

Parameters	Enumeration of properties reported for a scan. In addition to the arguments allowed at "Get(..)" command, also IJK() and EffectiveToolRad() are possible. Please notice that this property is not a static value of the Tool. It depends on the actual circumstances of the actual measurement (probing direction …).
Data	
Errors	Bad property
Remarks	Besides properties like X(), Y(), Z() the scan can report a Q() property that defines a "quality" for a scan point returned to the client by the DME. The Q() property is a numeric value between 0 and 100 indicating the "quality" of the measured point. A value of 0 defines a "good" point. Depending on the tool used to scan, values from 1 to 100 indicate a lower quality and reliability of the points. A value of 100 marks bad points. If points are out of the tool's measuring range, the DME may decide to flag them as "bad points" or stop the scan with an error. To increase system performance, already measured data may be transmitted from the server to the client while the execution of the scanning command is still in progress. To increase performance, the names of the values and the () are not defined in the answer strings of scanning. To prevent overhead (TCP/IP and other…) in returning each measuring value as an own string, the scanning results can be blocked. Multiple measuring results can be returned in one string. The number of values in a return string must be multiple of the definition done by OnScanReport. See example in 11.4. If no OnScanReport() is set in the current session the server has to use the default (see StartSession).

11.2 Scanning known contour

11.2.1 ScanOnCircleHint(..)

The ScanOnCircleHint command defines expected deviations of the measured circle from the nominal circle. The displacement and the form can be used by the DME to optimize the execution of the ScanOnCircle command.

- ScanOnCircleHint (Displacement, Form)

Parameters Displacement defines the maximum expected distance between the nominal circle center and the actual circle center.
Form defines the maximum expected form deviation calculated by Gauss of the circle. The form is defined by the radial distance of the innermost and outermost point related to the calculated circle.

11.2.2 ScanOnCircle(..)

- ScanOnCircle(Cx, Cy, Cz, Sx, Sy, Sz, i, j, k, delta, sfa, StepW)

Parameters	Cx, Cy, Cz	is the nominal center point of the circle
	Sx, Sy, Sz	is a point on the circle radius where the scan starts
	i,j,k	is the normal vector of the circle plane
	delta	is the angle to scan
	sfa	is the surface angle of the circle.
	StepW	average angular distance between 2 measured points in degrees.

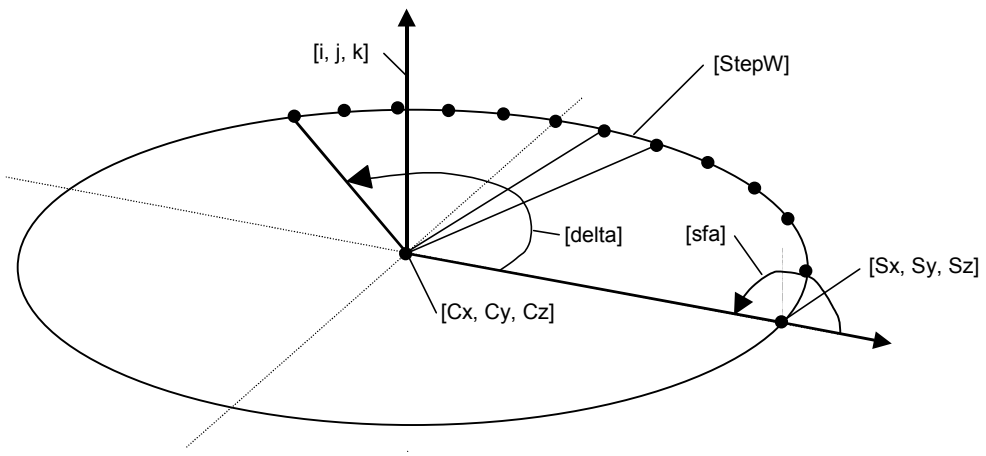

Data As defined by OnScanReport
Errors
Remark The distance between the center point (Cx,Cy,Cz) and the start point (Sx,Sy,Sz) may not be zero. The distance is the nominal radius of the circle to scan.

The plane vector (i,j,k) must be orthogonal to the vector from the center point to the start point (start direction).

The angle delta may be positive or negative and defines the arc to scan. A positive delta means counter clockwise, a negative clockwise (see picture).

Assume (i,j,k) to be the z-direction of a coordinate system and the start direction the x-direction. The reference for delta is the x-direction and the angle delta is defined in the xy plane.

The surface angle is the angle between the x-direction and the material direction in the xz plane. The surface angle is 0 for an outside circle and 180 for an inside circle. Using a surface angle enables to execute a circular path scan on cylinders (sfa=0 or sfa=180), on planes (sfa=90 or sfa=270) and cones. In the context of this command cylinders and planes are specialized cones.

The scan is executed as follows:

The DME will implicitly execute a PtMeas command using (Sx,Sy,Sz) as point and vector derived from the surface normal in the start point.

The actual scan radius is calculated from the circle center point (Cx, Cy, Cz) and the result point of the PtMeas command. The DME will scan on a circle defined by (Cx,Cy,Cz) and the actual scan radius.

The DME will scan the arc defined by delta.

During the scan the probe will move in the cone shell defined by the PtMeas result point and the probing direction rotated around an axis defined by (Cx,Cy,Cz,i,j,k).

The DME will return approximately delta/StepW points to the client using the format defined by OnScanReport.

11.2.3 ScanOnLineHint(..)

The ScanOnLineHint command defines expected deviations of the measured line from the nominal line. The angle and the form can be used by the DME to optimize the execution of the ScanOnLine command.

- ScanOnLineHint (Angle, Form)

Parameters Angle defines the maximum expected angle between the nominal line and the actual line.
Form defines the maximum expected deviation form of the Gauss calculated line.

11.2.4 ScanOnLine(..)

- ScanOnLine(Sx,Sy,Sz,Ex,Ey,Ez,i,j,k,StepW)

Parameters Sx, Sy, Sz defines the line start point
Ex, Ey, Ez defines the line end point

i,j,k is the surface normal vector on the line
StepW average distance between 2 measured points in mm.

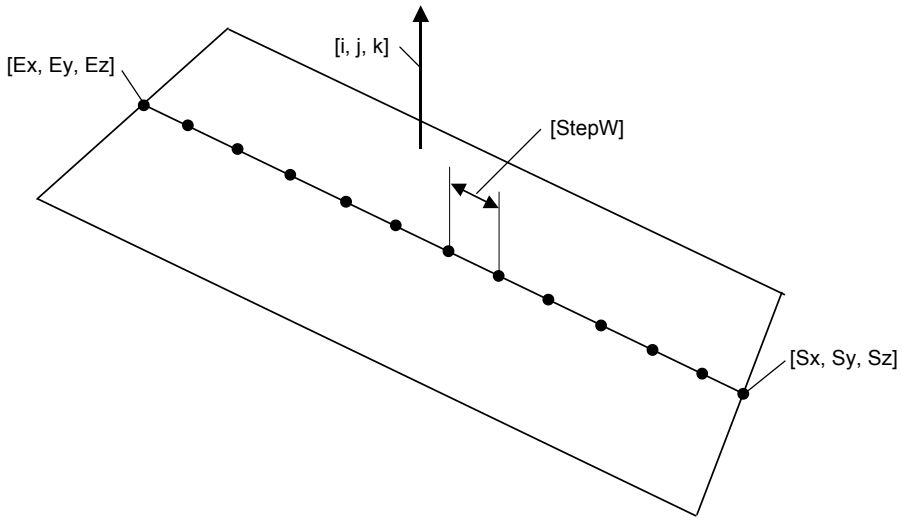

Data As defined by OnScanReport
Errors
Remark The distance between the start point (Sx,Sy,Sz) and the end point (Ex,Ey,Ez) may not be zero. This is the distance to scan.

The surface vector (i,j,k) must be orthogonal to the vector from the start point to the end point.

The scan is executed as follows:

The DME will implicitly execute a PtMeas command using (Sx,Sy,Sz) as point and (i,j,k) as surface normal.

The actual start point for the scan is the result point of the PtMeas command.

The DME will scan along the contour between start and end point. The scan terminates if the distance between a measured point and the actual start point is greater than the distance between (Sx,Sy,Sz) and (Ex,Ey,Ez),

During the scan the probe will move in a plane defined by (Sx,Sy,Sz) and the vector of the cross product between (i,j,k) and the direction from start to end point.

The DME will return approximately (distance start/end)/StepW points to the client using the format defined by OnScanReport.

11.3 Scan unknown contour

11.3.1 ScanUnknownHint(..)

The ScanUnknownHint command defines expected minimum radius of curvature in the unknown contour.

- ScanUnknownHint (MinRadiusOfCurvature)

Parameters Prognostic minimum radius in the curve to measure. Only values greater zero are allowed.

11.3.2 ScanInPlaneEndIsSphere(..)

The ScanInPlaneEndIsSphere allows to scan an unknown contour. The scan will stop if the sphere stop criterion is matched.

- ScanInPlaneEndIsSphere(Sx,Sy,Sz,Si,Sj,Sk,Dx,Dy,Dz,StepW, Ex,Ey,Ez,Dia,Ei,Ej,Ek)

Parameters	Sx, Sy, Sz	defines the scan start point
	Si, Sj, Sk	defines the surface direction in the start point
	Dx, Dy, Dz	defines the scan direction point
	StepW	is the average distance between 2 measured points
	Ex, Ey, Ez,	defines the expected scan end point
	Dia	define a sphere around the end point where the scan stops
	Ei, Ej, Ek	defines the surface direction at the end point. It defines the direction for retracting

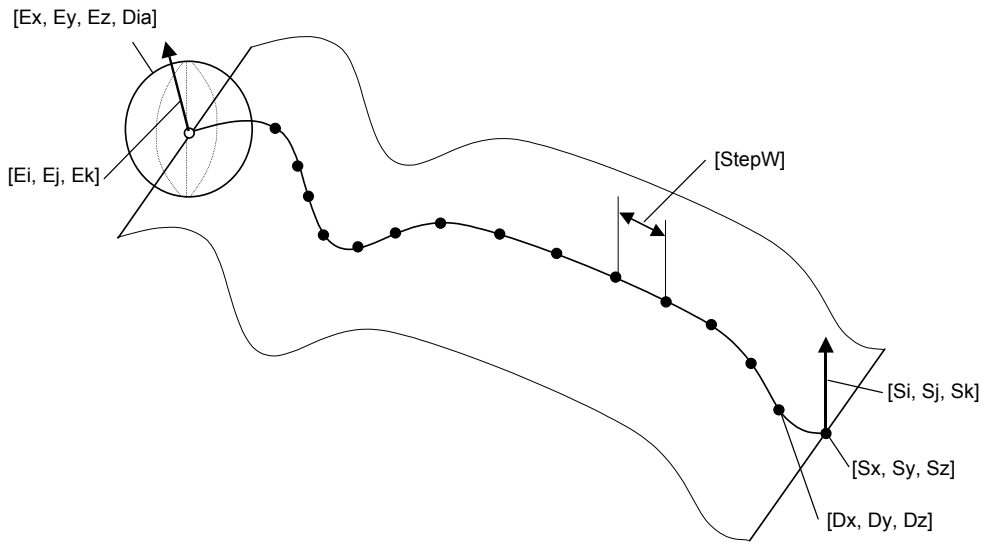

Data As defined by OnScanReport
Errors
Remark The distance between the start point (Sx,Sy,Sz) and the direction point (Dx,Dy,Dz) may not be zero.
The end point must be in the scanning plane defined by the start point and the normal vector defined by the cross product of (Si,Sj,Sk) and the direction vector from start to direction point.

The scan is executed as follows:

The DME will implicitly execute a PtMeas command using (Sx,Sy,Sz) as point and (Si,Sj,Sk) as surface normal.

The DME will start to scan into the direction from start to direction point.
During the scan the tool center will move within the scanning plane

The DME will stop scanning when within the stop sphere the distance between a scanned point and the sphere center has a local minimum.
If the start point is within the stop sphere, the DME will first leave the sphere and then start to check the stop criterion.

11.3.3 ScanInPlaneEndIsPlane(..)

The ScanInPlaneEndIsPlane allows to scan an unknown contour. The scan will stop if the plane stop criterion is matched.

- ScanInPlaneEndIsPlane(Sx,Sy,Sz,Si,Sj,Sk,Dx,Dy,Dz,StepW,
  Px,Py,Pz,Pi,Pj,Pk,n,Ei,Ej,Ek)

Parameters Sx, Sy, Sz defines the scan start point
Si, Sj, Sk defines the surface direction in the start point

Dx, Dy, Dz	defines the scan direction point
StepW	is the average distance between 2 measured points
Px, Py, Pz,	
Pi, Pj, Pk	Define a plane where the scan stops
n	Number of through the plane
Ei, Ej, Ek	surface vector at the end point. It defines the direction for retracting

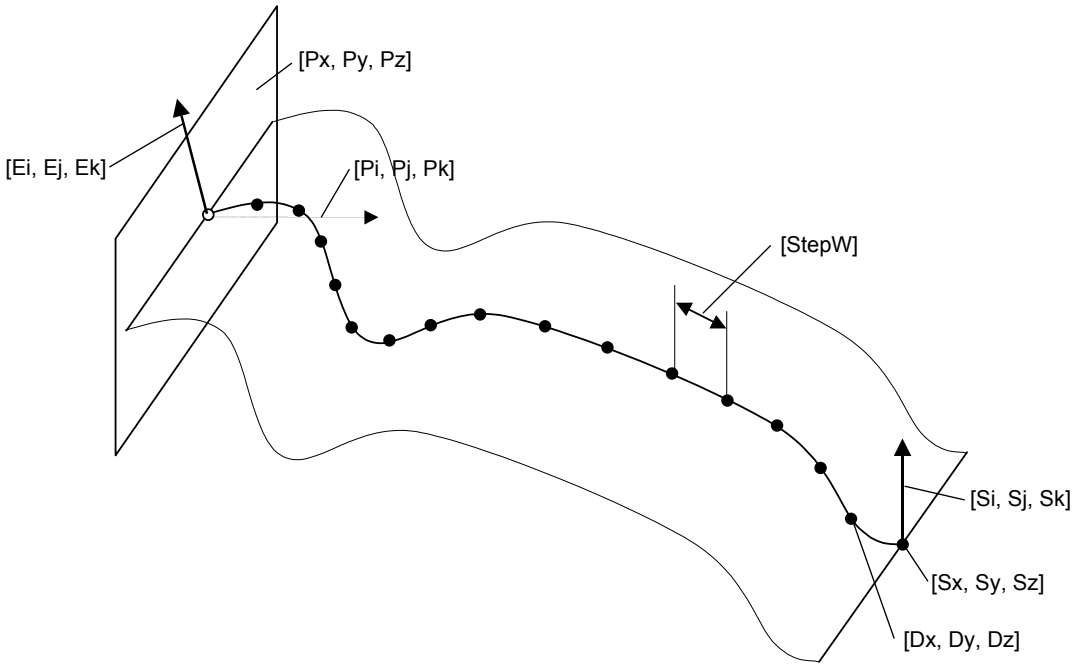

Data	As defined by OnScanReport
Errors	
Remark	The distance between the start point (Sx,Sy,Sz) and the direction point (Dx,Dy,Dz) may not be zero. The stop plane must be perpendicular to the scanning plane defined by the start point and the normal vector defined by the cross product of (Si,Sj,Sk) and the direction vector from start to direction point.

The scan is executed as follows:

The DME will implicitly execute a PtMeas command using (Sx, Sy, Sz) as point and (Si, Sj, Sk) as surface normal.

The DME will start to scan into the direction from start to direction point.
During the scan the tool center will move within the scanning plane.

The DME will stop scanning when it passes n times through the stop plane.
The DME will start to check the stop criteria when it has moved a distance that is larger than the distance between start and direction point.

11.3.4 ScanInPlaneEndIsCyl(..)

The ScanInPlaneEndIsCyl allows to scan an unknown contour. The scan will stop if the cylinder stop criterion is matched.

- ScanInPlaneEndIsCyl(Sx,Sy,Sz,Si,Sj,Sk,Dx,Dy,Dz,StepW,
  Cx,Cy,Cz,Ci,Cj,Ck,d,n,Ei,Ej,Ek)

Parameters	Sx, Sy, Sz	defines the scan start point
	Si, Sj, Sk	defines the surface direction in the start point
	Dx, Dy, Dz	defines the scan direction point
	StepW	is the average distance between 2 measured points
	Cx,Cy,Cz	
	Ci,Cj,Ck, d	define a cylinder where the scan stops
	n	Number of through the cylinder
	Ei, Ej, Ek	defines the surface vector at the end point. It defines the direction for retracting

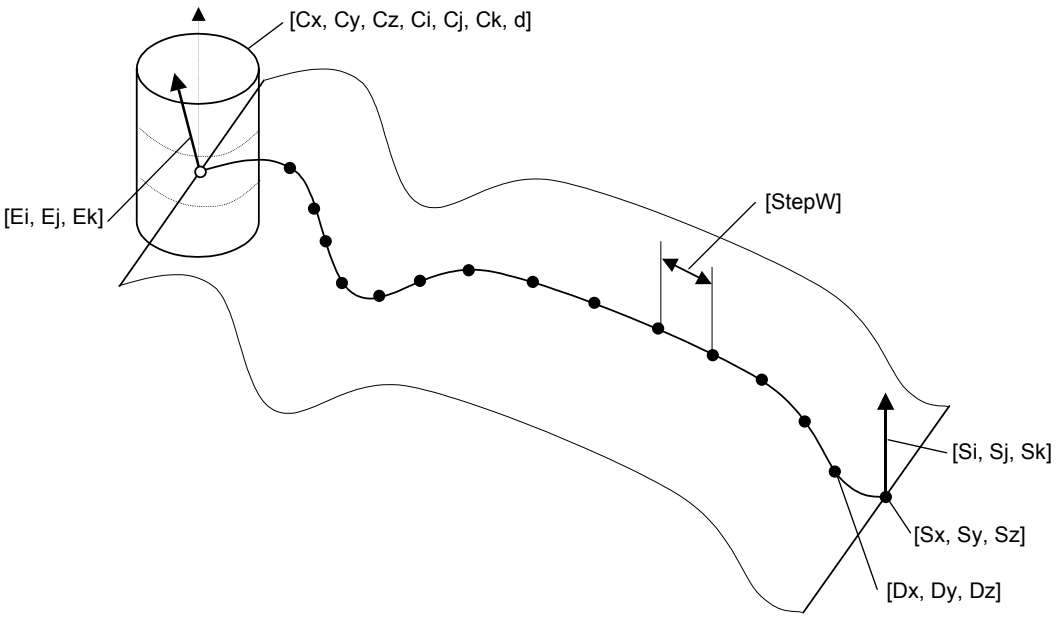

Data	As defined by OnScanReport
Errors	
Remark	The distance between the start point (Sx,Sy,Sz) and the direction point (Dx,Dy,Dz) may not be zero. The (Ci,Cj,Ck) must be parallel to the scanning plane defined by the start point and the normal vector defined by the cross product of (Si,Sj,Sk) and the direction vector from start to direction point..

The scan is executed as follows:

The DME will implicitly execute a PtMeas command using (Sx,Sy,Sz) as point and (Si,Sj,Sk) as surface normal.

The DME will start to scan into the direction from start to direction point.
During the scan the tool center will move within the scanning plane

The DME will stop scanning when it passes n times through the stop cylinder.
If the start point is within the stop cylinder, the DME will first leave the cylinder and then start checking the stop criterion.

11.3.5 ScanInCylEndIsSphere(..)

The ScanInCylEndIsSphere allows to scan an unknown contour. The scan will stop if the sphere stop criterion is matched.

- ScanInCylEndIsSphere(Cx,Cy,Cz,Ci,Cj,Ck,
  Sx,Sy,Sz,Si,Sj,Sk,
  Dx,Dy,Dz,StepW,
  Ex,Ey,Ez,Dia,Ei,Ej,Ek)

Parameters	Cx, Cy, Cz	
	Ci,Cj,Ck	defines the axis of the cylinder
	Sx, Sy, Sz	defines the scan start point
	Si, Sj, Sk	defines the surface direction in the start point
	Dx, Dy, Dz	defines the expected scan direction point
	StepW	is the average distance between 2 measured points
	Ex, Ey, Ez, Dia	Define a sphere where the scan stops
	Ei, Ej, Ek	defines the surface at the end point. It defines the direction for retracting

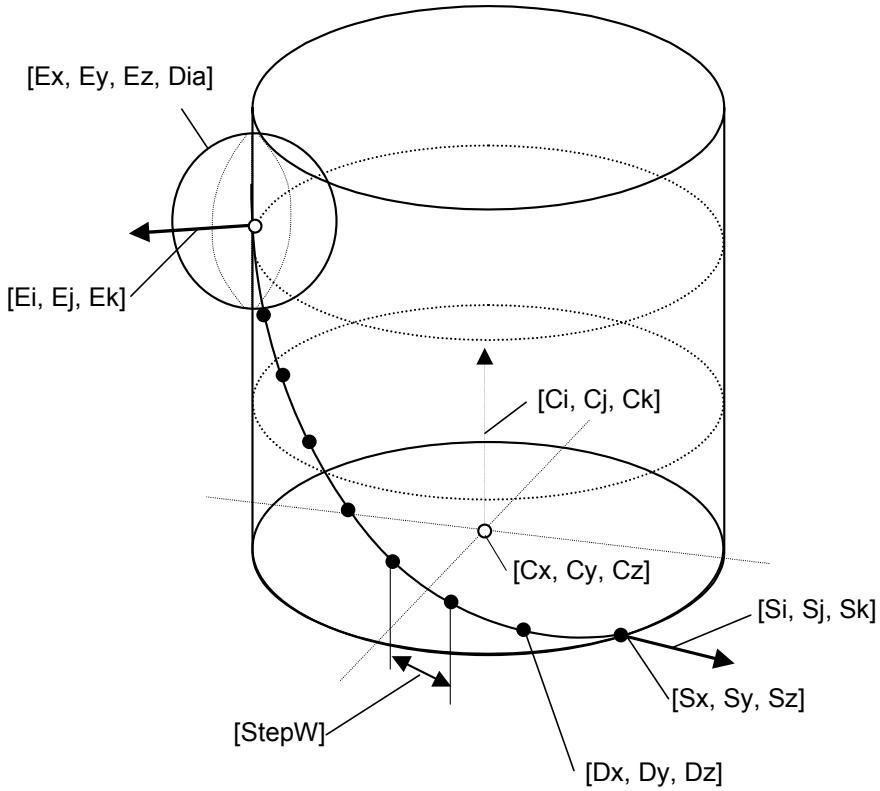

Data As defined by OnScanReport

Errors

Remark The distance between the start point projected to the cylinder axis and the start point (Sx,Sy,Sz) may not be zero and defines the diameter of the cylinder.

During the scan the tool center will move within the surface (ScanningCylinder), that is created by rotating a line (Sx,Sy,Sz, Ci,Cj,Ck) around the cylinder axis.

The distance between the start point (Sx,Sy,Sz) and the direction point (Dx,Dy,Dz) may not be zero.

The scan is executed as follows:

The DME will implicitly execute a PtMeas command using (Sx,Sy,Sz) as point and (Si,Sj,Sk) as surface normal.

The DME will start to scan into the direction from start to direction point.
During the scan the tool center will move ScanningCylinder.

The DME will stop scanning when within the stop sphere the distance between a scanned point and the sphere center has a local minimum.
If the start point is within the stop sphere, the DME will first leave the sphere and then start checking the stop criterion.

11.3.6 ScanInCylEndIsPlane(..)

The ScanInCylEndIsPlane allows to scan an unknown contour. The scan will stop if the plane stop criterion is matched.

- ScanInCylEndIsPlane(Cx,Cy,Cz,Ci,Cj,Ck,
  Sx,Sy,Sz,Si,Sj,Sk,
  Dx,Dy,Dz,StepW,
  Px,Py,Pz,Pi,Pj,Pk,n
  Ei,Ej,Ek)

Parameters	Cx, Cy, Cz	
	Ci,Cj,Ck	defines the axis of the cylinder
	Sx, Sy, Sz	defines the scan start point
	Si, Sj, Sk	defines the surface direction in the start point
	Dx, Dy, Dz	defines the scan direction point
	StepW	is the average distance between 2 measured points
	Px, Py, Pz,	
	Pi, Pj, Pk	defines the stop plane
	n	number of through stop plane
	Ei, Ej, Ek	surface direction at end point. It defines the direction for retracting

Data As defined by OnScanReport
Errors

Remark The distance between the start point projected to the cylinder axis and the start point (Sx,Sy,Sz) may not be zero and defines the diameter of the cylinder.

During the scan the tool center will move within the surface (ScanningCylinder), that is created by rotating a line (Sx,Sy,Sz, Ci,Cj,Ck) around the cylinder axis.

The distance between the start point (Sx,Sy,Sz) and the direction point (Dx,Dy,Dz) may not be zero.

The scan is executed as follows:

The DME will implicitly execute a PtMeas command using (Sx,Sy,Sz) as point and (Si,Sj,Sk) as surface normal.

The DME will start to scan into the direction from start to direction point.
During the scan the tool center will move ScanningCylinder.

The DME will stop scanning when it passes n times through the stop plane.
The DME will start to check the stop criteria when it has moved a distance that is larger than the distance between start and direction point.

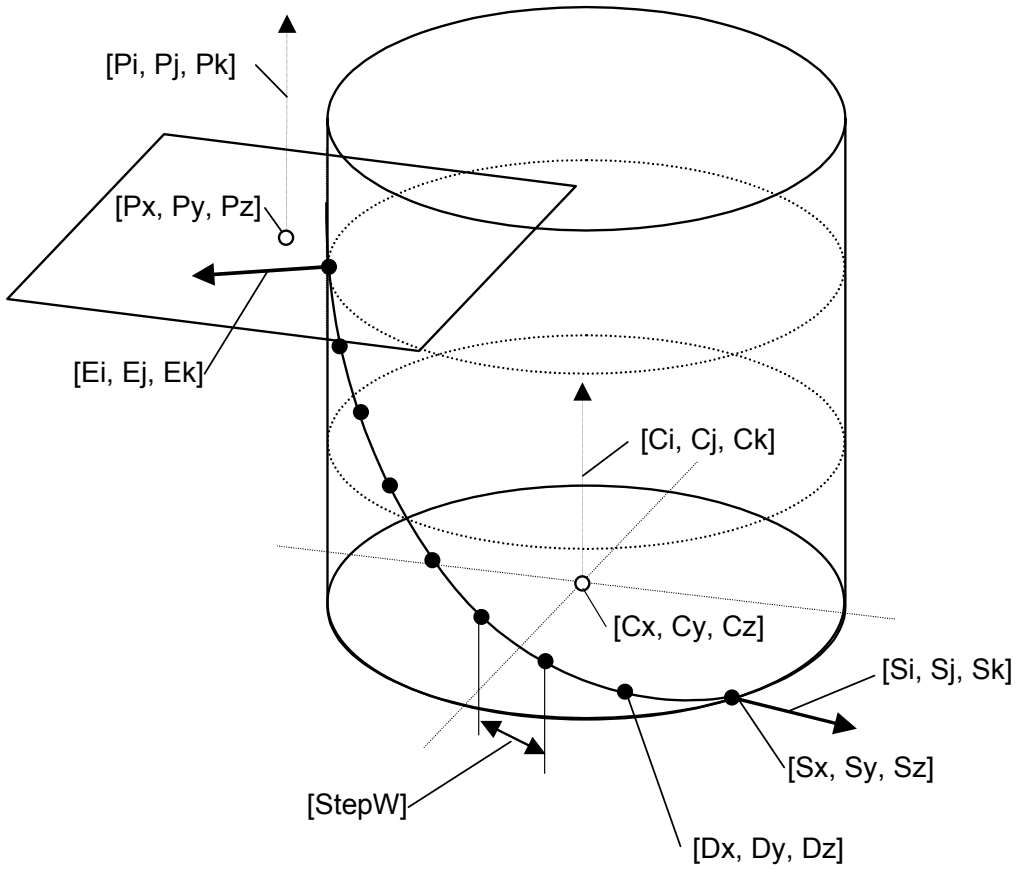
[Pi, Pj, Pk]
[Px, Py, Pz]
[Ei, Ej, Ek]
[Ci, Cj, Ck]
[Cx, Cy, Cz]
[Si, Sj, Sk]
[Sx, Sy, Sz]
[StepW]
[Dx, Dy, Dz]

11.4 Scanning Examples

11.4.1 Scanning known contour circle

Client to Server	Server to Client	Comment
00014 OnScanReport(X(),Y(),Z(),Q())		Client defines format for scanning result. Valid for every scanning command from now on.
	00014 &	
	00014 %	
00015 ScanOnCircleHint (0.01, 0.001)		Gives as a hint prognostic Displacement and Form
	00015 &	
	00015 %	
00016 ScanOnCircle (100, 0, -3, 120, 0, -3, 0, 0, 1, 360, 180, 0.5)		Arguments are: ScanOnCircle(Cx, Cy, Cz, Sx, Sy, Sz, i, j, k, delta, sfa, StepW)
	00016 &	
	00016 # 118.5, 0.0001, -3.0002, 0	Scanning result from server, one point, assuming probe sphere radius is 1.5mm
	00016 # 118.4992,0.1614,3.0002, 0,118.4971,0.3228,3.0002 ,100, …..	Multiple scanning results points blocked in one result string
	….	Follow multiple times until all scanning results are transmitted
	00016 %	Scanning ready

11.4.2 Scanning unknown contour

Client to Server	Server to Client	Comment
		Previous defined OnScanReport is used
00015 ScanUnknownHint (100.0)		Gives as a hint prognostic minimum radius of curve
	00015 &	
	00015 %	

00016 ScanInPlaneEndIsSphere (100,0,0,0,0,1,100,1,0,0.2,100,100,1.5,1.0,0,0,1)		Arguments are: ScanInPlaneEndIsSphere(Sx,Sy,Sz,Si,Sj,Sk,Dx,Dy,Dz,StepW,Ex,Ey,Ez,Dia,Ei,Ej,Ek)
	00016 &	
	00016 # 100.0000, 0.0000,1.5000,0,100.0001,0.2000,1.5000,0,100.0000,0.4000,1.5000,0	Scanning result from server, three points
	.....	Multiple scanning results
	00016 # 100.0000,99.8000,1.5000,0,100.0000,100.0000,1.5000,0	Follow multiple times until end criterion is satisfied and all scanning results are transmitted
	00016 %	Scanning ready

12 Rotary Table

12.1 AlignPart(..)

The client uses this method to force the part to be orientated according to the given vector(s).

- AlignPart(px1, py1, pz1, mx1, my1, mz1, alpha)
- AlignPart(px1, py1, pz1, mx1, my1, mz1,
  px2, py2, pz2, mx2, my2, mz2, alpha, beta)

Parameters	First command for single rotary tables. Two normalized vectors (px, py, pz, mx, my, mz). The first vector is in part coordinates. The second vector is in machine coordinates. Maximal allowed error angle (alpha) in which the found orientation may differ from the desired one projected to the rotation plane. In case the angle exceeds, “Part not aligned” is returned. In case alpha is zero no error check is performed. Second command if applicable when two pieces of rotational equipment rectangular to each other are available.
Data	Returns vectors (same number as set) which describe the reached alignment.
Errors	2506: Part not aligned.
Remark	In case of a rotary table both vectors are projected in the plane of rotation. After projection both vectors must be able to normalize. The returned vectors are the projected and normalized vectors actually used by the server.

13 Formtesters

A form tester is considered to be a CMM implementing a cylindrical coordinate system. Please note, that forms can be measured by standard CMM's as well. This chapter is created to address the additional functionality of dedicated form testing devices.

For this devices the rotation axis is implemented either by a rotary table where the part to measure is mounted on the table or by a spindle. In both cases the part can be moved relative to the rotation axis. It is important to note, that when moving the part the relation between machine and part coordinates is lost. In case of a Cartesian CMM this would be equivalent to moving the part after an alignment has been done.
To translated cylindrical coordinates into Cartesian coordinates we assume that the rotation axis direction is in the Z-direction and the sensor can be moved in radial (R-axis) and axial (Z-axis). The angle in the XY plane is defined by the position of the rotary table/spindle (C-axis) .

13.1 CenterPart(..)

This command is used to mechanically move the center of a measured circle into the rotation axis.

- CenterPart(px, py, pz, limit)

Parameters px, py, pz are the coordinates of a measured circle.
Limit is the target distance for the alignment.

Data CenterPart(0)
If the distance of the circle center from the rotation axis is greater or equal limit.
In this case the part was mechanically moved in such way, that the center of the circle is in the rotation axis.

CenterPart(1)
If the distance of the circle center from the rotation axis is less than limit.
In this case the part was not moved.

Errors

This command implicitly changes the Displacement hint value of ScanOnCirleHint and sets it to the actual distance of the circle center from the rotation axis.

13.2 TiltPart(..)

This command is used to align a direction with the rotation axis.

- TiltPart(dx, dy, dz, limit)

Parameters dx, dy, dz defines a direction vector.
Limit is the target distance for the alignment.

Data MoveCenterPart(0)
If the angle between the measured direction and the rotation axis is greater or equal to the angle defined by limit.
In this case the part was mechanically tilted in such way, that the direction is parallel to the rotation axis.

MoveCenterPart(1)
If the distance of the circle center from the rotation axis is less than limit.
In this case the part was not tilted.

Errors

13.3 TiltCenterPart(..)

This command is a combination of TiltPart() and CenterPart() where the tilt direction is described by the direction of the circle centers

- TiltCenterPart(px1, py1, pz1, px2, py2, pz2, limit)

Parameters px1, py1, pz1 are the coordinates of the first measured circle.
px2, py2, pz2 are the coordinates of the second measured circle.
Limit is the target distance for the alignment. Limit is defined for a reference distance of 100 mm along the Z-axis.

Data CenterPart(0)
If for both circles the distance of the circle center from the rotation axis is greater or equal limit.
In this case the part was tilted and centered.

CenterPart(1)
If for both circles the distance of the circle center from the rotation axis is less than limit.
In this case the part was not tilted and centered.

Errors

13.4 LockAxis(..)

This command is used disable an axis.
The lock is a property of the actual tool.
All axes are unlocked after a ChangeTool.

- LockAxis(..)

Parameters Enumeration of axes to be locked.
Valid axes are X(), Y(), Z(), C(), R(), Phi().

Data None
Errors Unable to move

Using LockAxis(X(), Y()) will disable any movement in X and Y even if commanded with a GoTo or similar command without causing an error.
Please note, that no errors with codes (2500, 2501, 2502) are generated for locked axes.
Locking Phi() will only enable moves in R , Z and C.

Appendix A C++ and Header Files for Explanation

A.1 \main\main.cpp

```
//-----------------------------------------------------------------------------------------

#include "../cartcmm/cartcmm.h"
//#include "../dme/dme.h"
//#include "../cartcmmwithrottbl/CartCmmWithRotTbl.h"

//-----------------------------------------------------------------------------------------

//Server        _Server;
//Server*       Srv()   {return &_Server;}

void main () {

//r8            speed = Srv()->GoToPar()->Speed();
//ie            r     = Srv()->GoToPar()->Speed(5.0);

//-----------------------------------------------------------------------------------------
};
```

A.2 \server

A.2.1 \server\server.h

```
#if !defined(AFX_Server_H__E4F9759D_0A8F_11D3_A3F2_0000F87ABD00__INCLUDED_)
#    define  AFX_Server_H__E4F9759D_0A8F_11D3_A3F2_0000F87ABD00__INCLUDED_

#include "Part.h"
#include <ETag.h>

//-----------------------------------------------------------------------------------------

class Server  {

Part            _Part;

//-----------------------------------------------------------------------------------------

public:         Server  ();
virtual         ~Server ();

//-----------------------------------------------------------------------------------------

void            StartSession   (cTag tag);            // connect to client
void            EndSession     (cTag tag);            // disconnect from client
ie              StopDaemon     (cTag tag, cETag &fqt);       // stop daemon
ie              StopAllDaemons (cTag tag);            // stop all daemons
void            AbortE         (cTag tag);            // abort pending transactions
void            GetErrorInfo   (cTag tag);            // abort pending transactions
void            ClearAllErrors (cTag tag);
void            GetDMEVersion  (cTag tag, String &version);  // get version from DME

//-----------------------------------------------------------------------------------------

virtual void    GetProp        (cTag     tag, ...);
virtual void    GetPropE       (cTag     tag, ...);
virtual void    SetProp        (cTag     tag, ...);
virtual void    EnumProp       (cTag     tag, ...);
virtual void    EnumAllProp    (cTag     tag, ...);

//-----------------------------------------------------------------------------------------
private:                                              // these methods are for
void            MainLoop                        ();   // documentation purpose only
void            DispatchToEventQue              (Tag *tag, String &command);
void            Dispatch                        (Tag *tag, String &command);
void            SendAck                         (Tag *tag);
void            SendData                        (Tag *tag, cString &response);
```

```
void            SendError                   (Tag *tag, cErrorSeverity sev, cErrorCode code);
void            SendReady                   (Tag *tag);
void            FormatTag                   (String &response, Tag* tag);
i4              DecodeTag                   (cString &command);
void            Transmit                    (cString &response);

//-----------------------------------------------------------------------------------------

bool            ServerIsAlive();
ErrorSeverity   GetErrorSeverity();
ErrorCode       GetErrorCode();
bool            ErrorDuringCommandExecution();

};//-----------------------------------------------------------------------------------------
#endif
```

A.2.2 \server\part.h

```
#if !defined(AFX_Part_H__E4F9759D_0A8F_11D3_A3F2_0000F87ABD00__INCLUDED_)
#    define  AFX_Part_H__E4F9759D_0A8F_11D3_A3F2_0000F87ABD00__INCLUDED_

#include <IppTop.h>

//-----------------------------------------------------------------------------------------

class Part {

//-----------------------------------------------------------------------------------------

r8              _Approach;
r8              _Search;
r8              _XpanCoefficient;
r8              _Temperature;

//-----------------------------------------------------------------------------------------

public:         Part    ();
virtual         ~Part   ();

//-----------------------------------------------------------------------------------------

r8              Approach()      {return _Approach;}
r8              Search()        {return _Search;}

//-----------------------------------------------------------------------------------------
};
#endif
```

A.2.3 \server\server.cpp

```
//-----------------------------------------------------------------------------------------

#include "String.h"
#include "Server.h"

//-----------------------------------------------------------------------------------------

void    Server::MainLoop()            {               // for documentation only  ***

        // this method is implemented for
        // documentation purpose only
String          command;
Tag*            tag     = Nil;
                        do {
                         // wait for a command line from client
                         // .. Wait(command)
i4                       tagval = DecodeTag(command);        // get tag values define by chars
from 2 to 5

                         if (command.FirstCharIs('E')) {
                          tag = new ETag(tagval);
                          SendAck(tag);                      // confirm receive
                          DispatchToEventQue(tag, command);} // do whatever is necessary
```

```
                        else {
                         tag = new Tag(tagval);
                         SendAck(tag);                        // confirm receive
                         Dispatch(tag, command);}             // do whatever is necessary

                    if (ErrorDuringCommandExecution()) {    // something went wong ?
                         SendError(tag, GetErrorSeverity(), GetErrorCode());}     // send error
message

                        SendReady(tag);}
                       while (ServerIsAlive());}             // while server is alive

//-----------------------------------------------------------------------------------------

void    Server::Transmit(cString &response)  {               // for documentation only  ***


               // send this string to client
                       /*... Send(response) */}

//-----------------------------------------------------------------------------------------

void    Server::FormatTag(String &response,  Tag* tag){      // for documentation only  ***

                       response.SetLen0();                   // remove all chars
                       response.Format(tag->Val(), 5);       // format 5 digits with leading
zeros
                       if (dynamic_cast<ETag*>(tag) !=Nil) {
                        response[1]  = 'E';}                 // use E to indicate event
                       response     += " ";}                 // append a space char

//-----------------------------------------------------------------------------------------

void    Server::SendAck(Tag* tag)     {       // for documentation only  ***

String         response;
                       FormatTag(response, tag);
                       response += "&";                      // add %
                       Transmit(response);}

//-----------------------------------------------------------------------------------------

void    Server::SendData(Tag *tag, cString &data)    {       // for documentation only  ***

String         response;
                       FormatTag(response, tag);
                       response += "# ";                     // add # and space
                   response += data;                         // add data
                       Transmit(response);}

//-----------------------------------------------------------------------------------------

void    Server::SendError(Tag *tag, cErrorSeverity sev, cErrorCode code)   {       // for
documentation only  ***

String         response;
                       FormatTag(response, tag);
                       response += "! ";                     // add ! and space
//                 response += ...                           // add error
                       Transmit(response);}

//-----------------------------------------------------------------------------------------

void    Server::SendReady(Tag *tag)   {                      // for documentation only  ***

String         response;
                       FormatTag(response, tag);
                       response    += "%";                   // add %
                       Transmit(response);}

//-----------------------------------------------------------------------------------------
```

A.3 \dme

A.3.1 \dem\dme.h

```
#if !defined(AFX_DME_H__E4F9759D_0A8F_11D3_A3F2_0000F87ABD00__INCLUDED_)
#    define  AFX_DME_H__E4F9759D_0A8F_11D3_A3F2_0000F87ABD00__INCLUDED_

#include "../server/Server.h"
#include "../toolchanger/ToolChanger.h"

//-----------------------------------------------------------------------------------------

class DME : public Server {


ToolChanger            _ToolChanger;

//-----------------------------------------------------------------------------------------

bool                   _IsHomed;
bool                   _IsUserEnabled;

//-----------------------------------------------------------------------------------------

public:                DME     ();
virtual                ~DME    ();

//-----------------------------------------------------------------------------------------

ToolChanger*   TCh()   {return &_ToolChanger;}

//-----------------------------------------------------------------------------------------

virtual ie      Home    (cTag tag)             {}
i4              IsHomed        (cTag tag)     {return _IsHomed;}

//-----------------------------------------------------------------------------------------

virtual void    EnableUser             (cTag tag)                          {}
virtual void    DisableUser            (cTag tag)                          {}
bool    IsUserEnabled                  (cTag tag)                          {}

//-----------------------------------------------------------------------------------------

ie              OnPtMeasReport         (cTag  tag, ...);
ie              OnMoveReportE          (cETag tag, cr8 dis, cr8 time,...);

//-----------------------------------------------------------------------------------------

void            GetMachineClass        (cTag tag)                          {}
void            GetErrStatusE          (cTag tag)                          {}
void            GetXtdErrStatus        (cTag tag)                          {}

//-----------------------------------------------------------------------------------------

void    Get                            (cTag     tag, ...);
ie      GoTo                           (cTag     tag,...);
ie      PtMeas                         (cTag     tag,...);
ie      PtMeasIJK                      (cTag     tag,...);
KTool*  Tool            ()      const          {return TCh()->_ActTool;}
ie      FindTool        (cTag tag,  cString &name)    {return TCh()->FindTool    (tag, name);}
KTool*  FoundTool       ()      const          {return TCh()->_FoundTool;}
ie      ChangeTool      (cTag tag,  cString &name)    {return TCh()->ChangeTool (tag, name);}
ie      GetChangeToolAction    (cTag tag,  cString &name)    {return TCh()-
>GetChangeToolAction(tag, name);}
ie      SetTool         (cTag tag,  cString &name)    {return TCh()->SetTool     (tag, name);}
ie      AlignTool       (cTag tag,  cV3 &ijk, cr8 alpha)     {return Tool()->AlignTool (tag,
ijk, alpha);}
ie      AlignTool       (cTag tag,  cV3 &ijk,  cV3 &uvw, cr8 alpha, cr8 beta)      {return
Tool()->AlignTool (tag, ijk, uvw, alpha, beta);}
GoToPars*       GoToPar         ()      const   {return Tool()->GoToPar();}
PtMeasPars*     PtMeasPar       ()      const   {return Tool()->PtMeasPar();}
GoToPars*       ABCGoToPar      ()      const   {return Tool()->ABCGoToPar();}
PtMeasPars*     ABCPtMeasPar    ()      const   {return Tool()->ABCPtMeasPar();}

//-----------------------------------------------------------------------------------------

virtual i4              CenterPart                          (cTag tag,  ...);             //
Form tester methods
virtual i4              TiltPart                            (cTag tag,  ...);
virtual i4              TiltCenterPart                (cTag tag,  ...);
```

```
//-----------------------------------------------------------------------------------

virtual r8              X       ();     // return machine position in the
virtual r8              Y       ();     // selected coordinate system
virtual r8              Z       ();
virtual V3              IJK     ();

virtual ie              X       (cr8 x);        // move machine to target position
virtual ie              Y       (cr8 y);
virtual ie              Z       (cr8 z);
virtual ie              IJK     (const V3 &ijk);

//-----------------------------------------------------------------------------------

ie                      OnScanReport                    (cTag  tag, ...);
ie                      ScanOnCircleHint                (cTag  tag, ...);
ie                      ScanOnCircle                    (cTag  tag, ...);
ie                      ScanOnLineHint                  (cTag  tag, ...);
ie                      ScanOnLine                      (cTag  tag, ...);
ie                      ScanUnKnownHint                 (cTag  tag, ...);
ie                      ScanInPlaneEndIsSphere          (cTag  tag, ...);
ie                      ScanInPlaneEndIsPlane           (cTag  tag, ...);
ie                      ScanInPlaneEndIsCyl             (cTag  tag, ...);
ie                      ScanInCylEndIsSphere            (cTag  tag, ...);
ie                      ScanInCylEndIsPlane             (cTag  tag, ...);

};//-------------------------------------------------------------------------------------
#endif
```

A.4 \cartcmm

A.4.1 \cartcmm\cartcmm.h

```
#if !defined(AFX_CartCMM_H__E4F9759D_0A8F_11D3_A3F2_0000F87ABD00__INCLUDED_)
#    define  AFX_CartCMM_H__E4F9759D_0A8F_11D3_A3F2_0000F87ABD00__INCLUDED_

#include "../DME/dme.h"
#include "T33.h"

//-----------------------------------------------------------------------------------

class CartCMM :public DME {

Axis            _XAxis;
Axis            _YAxis;
Axis            _ZAxis;

//-----------------------------------------------------------------------------------

CoordSys        _CoordSys;
T33             _PartCoordTrandformation;

//-----------------------------------------------------------------------------------

public:         CartCMM ();
virtual         ~CartCMM        ();

//-----------------------------------------------------------------------------------

Axis*           XAx()   {return &_XAxis;}
Axis*           YAx()   {return &_YAxis;}
Axis*           ZAx()   {return &_ZAxis;}

//-----------------------------------------------------------------------------------

virtual
ie              SetCoordSystem(CoordSys csy);
CoordSys        GetCoordSystem()        {return _CoordSys;}

//-----------------------------------------------------------------------------------

ie              SetCsyTransformation(const T33EA &tra);
T33EA           GetCsyTransformation();

//-----------------------------------------------------------------------------------

protected:
```

```
virtual r8      X();                    // return machine position in the
virtual r8      Y();                    // selected coordinate system
virtual r8      Z();
virtual V3      IJK();

virtual ie      X(cr8 x);               // move machine to target position
virtual ie      Y(cr8 y);
virtual ie      Z(cr8 z);
virtual ie      IJK(const V3 &ijk);

//-----------------------------------------------------------------------------------
};
#endif
```

A.4.2 \cartcmm\eulerw.cpp

```
// EulerA.cpp: implementation of the EulerA class.

#include "R33.h"
#include "EulerW.h"

//-----------------------------------------------------------------------------------

cr8             R_Delta = 1e-12;

r8              abs   (cr8 x);
r8              sind  (cr8 x);
r8              cosd  (cr8 x);
r8              Acosd (cr8 x);
r8              Atan2d(cr8 y, cr8 x);

//-----------------------------------------------------------------------------------

                EulerA::EulerA(cR33 &b){              // create Euler from
                        _Psi  = 0,
        // rotation matrix
                        _Phi  = 0;
r8                      s3    = 0,
                        c3    = 0,
                        c1    = b.Val(3,3);
                        _Theta  = Acosd(c1);
r8                      s1    = sind(_Theta);
                        if (abs(s1) > R_Delta) {      // check if Tht() is 0
r8                       s2   =  b.Val(1,3)/s1,       // no calculate Psi()
                         c2   = -b.Val(2,3)/s1;
                         _Psi = Atan2d(s2, c2);
EulerA          ew(_Theta, _Psi, _Phi);               // use Tht(), Psi(), 0 to create matrix
R33                      r(ew); -r;                   // and calculate Psi() from orig mat
R33                      rr(b); rr*=r;                // and matrix build from Tht() Psi()
                         c3   = r.Val(1,1);
                         s3   = r.Val(2,1);}
                        else {                        // Tht()=0, Psi()=0
                         c3   = b.Val(1,1);           // calculate phi
                         s3   = b.Val(2,1);}
                        _Phi  = Atan2d(s3, c3);}

//-----------------------------------------------------------------------------------

void    R33::Create(cEulerA &b) {

r8                      c1              = cosd(b.Tht()),      //      theta==0 && psi==0
                        s1              = sind(b.Tht()),
                        c2              = cosd(b.Psi()),      //      c3      s3      0
                        s2              = sind(b.Psi()),      //      -s3     c3      0
                        c3              = cosd(b.Phi()),      //       0      0       1
                        s3              = sind(b.Phi());

                        Mat(1,1) =  c2*c3-c1*s2*s3;
                        Mat(1,2) =  s2*c3+c1*c2*s3;
                        Mat(1,3) =  s1*s3;

                        Mat(2,1) = -c2*s3-c1*s2*c3;
                        Mat(2,2) = -s2*s3+c1*c2*c3;
                        Mat(2,3) =  s1*c3;
                        //      c2*c3-c1*s2*s3        s2*c3+c1*c2*s3        s1*s3
```

```
                    Mat(3,1) =  s1*s2;
                    //      -c2*s3-c1*s2*c3       -s2*s3+c1*c2*c3        s1*c3
                    Mat(3,2) = -s1*c2;
                    Mat(3,3) =  c1;}
                    //       s1*s2                -s1*c2                 c1

//-----------------------------------------------------------------------------------
```

A.5 \cartcmmwithrottbl

A.5.1 \cartcmmwithrottbl\cartcmmwithrottbl.h

```
#if !defined(AFX_CartCmmWithRotTbl_H__E4F9759D_0A8F_11D3_A3F2_0000F87ABD00__INCLUDED_)
#    define  AFX_CartCmmWithRotTbl_H__E4F9759D_0A8F_11D3_A3F2_0000F87ABD00__INCLUDED_

#include "../cartcmm/cartcmm.h"

//-----------------------------------------------------------------------------------

class CartCmmWithRotTbl: public CartCMM {

//-----------------------------------------------------------------------------------

Axis           _RAxis;

//-----------------------------------------------------------------------------------

public:        CartCmmWithRotTbl     ();
virtual          ~CartCmmWithRotTbl  ();

//-----------------------------------------------------------------------------------

Axis*          RAx                   () {return &_RAxis;}

//-----------------------------------------------------------------------------------

ie             AlignPart      (cTag     tag, ...);

//-----------------------------------------------------------------------------------

virtual char*          Type           () {return "CartCMMWithRotTbl";}


};//-----------------------------------------------------------------------------------
#endif
```

A.6 \toolchanger

A.6.1 \toolchanger\toolchanger.h

```
// ToolChanger.h: interface for the ToolChanger class.

#if !defined(AFX_ToolChanger_H__2418E2DB_F44D_4F25_B290_3EDC4854E112__INCLUDED_)
#    define  AFX_ToolChanger_H__2418E2DB_F44D_4F25_B290_3EDC4854E112__INCLUDED_

#include "ToolAB.h"

//-----------------------------------------------------------------------------------

class ToolChanger {                                        friend class DME;

KTool*                 _ActTool;
KTool*                 _FoundTool;
KTool*                 _DefaultTool;
KTool*                 _UndefTool;

//-----------------------------------------------------------------------------------

Ary<KTool*>            _Tools;
V3                     _TransferPosition;

//-----------------------------------------------------------------------------------
```

```
                        ToolChanger    (){

/*
String                  name         = "DefaultTool"
                        _DefaultTool = new Tool(name);

                        name         = "UndefTool"
                        _UndefTool   = new Tool(name);

                        name         = "NoTool"
Tool*                   tool         = new Tool(name);
                        _Tool.Add(tool);

                        name         = "ReferenceTool"
Tool*                   tool         = new Tool(name);
                        _Tool.Add(tool);

*/}

//-----------------------------------------------------------------------------------------

virtual           ~ToolChanger();

//-----------------------------------------------------------------------------------------

KTool*                  ActTool()      const   {return _ActTool;}
KTool*                  FoundTool()            {return _FoundTool;}

//-----------------------------------------------------------------------------------------

GoToPars*               GoToPar()      const {GoToPars* r=ActTool()->GoToPar ();   if (r==Nil)
r=_DefaultTool->GoToPar();  return r;}
GoToPars*               ABCGoToPar()   const {GoToPars* r=ActTool()->ABCGoToPar(); if (r==Nil)
r=_DefaultTool->ABCGoToPar(); return r;}

//-----------------------------------------------------------------------------------------

PtMeasPars*             PtMeasPar()    const {PtMeasPars* r=ActTool()->PtMeasPar ();   if
(r==Nil)  r=_DefaultTool->PtMeasPar(); return r;}
PtMeasPars*             ABCPtMeasPar() const {PtMeasPars* r=ActTool()->ABCPtMeasPar(); if
(r==Nil) r=_DefaultTool->ABCPtMeasPar(); return r;}

//-----------------------------------------------------------------------------------------

i4                      Howmany(cTag tag)      {return _Tools.Len();}

//-----------------------------------------------------------------------------------------

ie                      Qualify        (cTag tag)     {return _ActTool->Qualify(tag);}
ie                      ChangeTool     (cTag tag, cString &name);
ie                      GetChangeToolAction   (cTag tag, cString &name);
ie                      SetTool        (cTag tag, cString &name);
ie                      FindTool       (cTag tag, cString &name){_FoundTool = Find(tag, name);
return (_FoundTool==Nil) ? ErrorToolNotFound : ErrorSuccess;}
ie                      FindTool       (cTag tag, cV3     &ijk)      {_FoundTool = Find(tag,
ijk);  return (_FoundTool==Nil) ? ErrorToolNotFound : ErrorSuccess;}
String                  ActToolName    (cTag tag)     {return _ActTool->Name();}

//-----------------------------------------------------------------------------------------

void            EnumTools(cTag tag) {
String                  name;
                               for (i4 i=0; i < _Tools.Len();) {
                                name = _Tools[i]->Name();
                                /*send name to client*/}}

//-----------------------------------------------------------------------------------------
private:
KTool*          Find(cTag tag, cString &name) {/*  for(i..)  toolname = _Tools[i]->Name()*/};
KTool*          Find(cTag tag, cV3     &ijk)  {/*  for(i..)  toolname = _Tools[i]->Name()*/};

//-----------------------------------------------------------------------------------------
};
#endif
```

A.6.2 \toolchanger\tool.h

```
// Tool.h: interface for the Tool class.

#if !defined(AFX_Tool_H__79AF9D2B_A7BC_4F04_923D_1452AF559CC1__INCLUDED_)
#    define  AFX_Tool_H__79AF9D2B_A7BC_4F04_923D_1452AF559CC1__INCLUDED_

#include "String.h"
#include "GoToParams.h"
#include "PtMeasPars.h"
#include "V3.h"
#include "Axis.h"

//-----------------------------------------------------------------------------------------

class KTool  {                                                  friend class ToolChanger;

String                  _Name;
String                  _Id;
i4                      _Type;

//-----------------------------------------------------------------------------------------

GoToPars*               _GoToPar;
GoToPars*               _ABCGoToPar;

//-----------------------------------------------------------------------------------------

PtMeasPars*             _PtMeasPar;
PtMeasPars*             _ABCPtMeasPar;

//-----------------------------------------------------------------------------------------

String                  _QualificationArtifact;
i4                      _QualificationState;
DateTime                _LastQualificationDate;
ui                      _MethodsSupported;

//-----------------------------------------------------------------------------------------

public:                 KTool(cString &name);
virtual                    ~KTool();

//-----------------------------------------------------------------------------------------

String                  Name()                  {return _Name;}
String                  Id      ()              {return _Name;}

//-----------------------------------------------------------------------------------------

GoToPars*               GoToPar    ()   const   {return _GoToPar;}
GoToPars*               ABCGoToPar()    const   {return _ABCGoToPar;}

//-----------------------------------------------------------------------------------------

PtMeasPars*             PtMeasPar()     const   {return _PtMeasPar;}
PtMeasPars*             ABCPtMeasPar() const    {return _ABCPtMeasPar;}

//-----------------------------------------------------------------------------------------

bool                    CanDoGoTo   ();
bool                    CanDoPtMeas();

//-----------------------------------------------------------------------------------------

ie                      Qualify(cTag tag);

//-----------------------------------------------------------------------------------------

virtual ie              Align           (cTag tag, cV3 &ijk)  {return ErrorBadContext;}
virtual ie              AlignTool       (cTag tag,  cV3 &ijk, cr8 alpha)
                        {return ErrorBadContext;}
virtual ie              AlignTool       (cTag tag,  cV3 &ijk,  cV3 &uvw, cr8 alpha, cr8 beta)
                        {return ErrorBadContext;}
virtual ie              Alignment       (cTag tag)

//-----------------------------------------------------------------------------------------

virtual ie              CollisionVolume        (cTag tag,  ...);
```

```
//-----------------------------------------------------------------------------------------

virtual void   EnumProp       (cTag     tag, ...);
virtual void   GetProp        (cTag     tag, ...);
virtual void   GetPropE       (cTag     tag, ...);
virtual void   SetProp        (cTag     tag, ...);

//-----------------------------------------------------------------------------------------

protected:
virtual r8             A()                                          {return 0;}
virtual r8             B()                                          {return 0;}
virtual r8             C()                                          {return 0;}

virtual ie             A(cr8 a)                                     {return ErrorSuccess;}
virtual ie             B(cr8 b)                                     {return ErrorSuccess;}
virtual ie             C(cr8 c)                                     {return ErrorSuccess;}

//-----------------------------------------------------------------------------------------
};
#endif
```

A.6.3 \toolchanger\toolab.h

```
// ToolAB.h: interface for the ToolAB class.

#if !defined(AFX_ToolAB_H__79AF9D2B_A7BC_4F04_923D_1452AF559CC1__INCLUDED_)
#    define  AFX_ToolAB_H__79AF9D2B_A7BC_4F04_923D_1452AF559CC1__INCLUDED_

#include "Tool.h"

//-----------------------------------------------------------------------------------------

class ToolAB   : public KTool {

Axis                   _AAxis;
Axis                   _BAxis;

//-----------------------------------------------------------------------------------------

public:                ToolAB(cString &name);
virtual                ~ToolAB();

//-----------------------------------------------------------------------------------------

ie                     Align    (cTag tag, cV3 &ijk);
void                   EnumProp(cTag tag);

//-----------------------------------------------------------------------------------------

r8                     A();
r8                     B();

ie                     A(cr8 a);
ie                     B(cr8 b);

//-----------------------------------------------------------------------------------------


//-----------------------------------------------------------------------------------------
};
#endif
```

A.6.4 \toolchanger\toolabc.h

```
// ToolABC.h: interface for the ToolABC class.

#if !defined(AFX_ToolABC_H__79AF9D2B_A7BC_4F04_923D_1452AF559CC1__INCLUDED_)
#    define  AFX_ToolABC_H__79AF9D2B_A7BC_4F04_923D_1452AF559CC1__INCLUDED_

#include "ToolAB.h"

//-----------------------------------------------------------------------------------------

class ToolABC   : public ToolAB {
```

```
Axis                    _CAxis;

//-----------------------------------------------------------------------------------------

public:                 ToolABC(const String &name);
virtual                 ~ToolABC();

//-----------------------------------------------------------------------------------------

ie                      Align   (cTag tag, cV3 &ijk);
void                    EnumProp(cTag tag);

//-----------------------------------------------------------------------------------------

r8                      C();
ie                      C(cr8 c);

//-----------------------------------------------------------------------------------------
};
#endif
```

A.6.5 \toolchanger\gotoparams.h

```
// GoToPars.h: interface for the GoToPars class.

#if !defined(AFX_GoToPars_H__79AF9D2B_A7BC_4F04_923D_1452AF559CC1__INCLUDED_)
#    define  AFX_GoToPars_H__79AF9D2B_A7BC_4F04_923D_1452AF559CC1__INCLUDED_

#include "../lib/String.h"
#include "Param.h"

//-----------------------------------------------------------------------------------------

class GoToPars  {

Param           _Speed;
Param           _Accel;

//-----------------------------------------------------------------------------------------

public:         GoToPars();
virtual         ~GoToPars();

//-----------------------------------------------------------------------------------------

r8              MinSpeed()                      const   {return _Speed.Min();}
r8              Speed   ()                      const   {return _Speed.Val();}
r8              MaxSpeed()                      const   {return _Speed.Max();}
bool            CanChangeSpeed()                const   {return _Speed.CanChange();}
ie              Speed(cr8 s)                            {return _Speed.Val(s);}

//-----------------------------------------------------------------------------------------

r8              MinAccel()                      const   {return _Accel.Min();}
r8              Accel   ()                      const   {return _Accel.Val();}
r8              MaxAccel()                      const   {return _Accel.Max();}
bool            CanChangeAccel()                const   {return _Accel.CanChange();}
ie              Accel(cr8 s)                            {return _Accel.Val(s);}

//-----------------------------------------------------------------------------------------

void            EnumProp();

//-----------------------------------------------------------------------------------------
};
#endif
```

A.6.6 \toolchanger\ptmeaspars.h

```
// PtMeasPars.h: interface for the PtMeasPars class.

#if !defined(AFX_PtMeasPars_H__79AF9D2B_A7BC_4F04_923D_1452AF559CC1__INCLUDED_)
#    define  AFX_PtMeasPars_H__79AF9D2B_A7BC_4F04_923D_1452AF559CC1__INCLUDED_

#include "../lib/String.h"
#include "../lib/DateTime.h"
```

```
#include "GoToParams.h"

//-----------------------------------------------------------------------------------------

class PtMeasPars  {

Param          _Approach;
r8                     _Search;
r8                     _Retract;
GoToPars       _Move;

//-----------------------------------------------------------------------------------------

public:        PtMeasPars();
virtual    ~PtMeasPars();

//-----------------------------------------------------------------------------------------

bool           CanChangeSpeed        ()             {return _Move.CanChangeSpeed();}
r8             MinSpeed              ()             {return _Move.MinSpeed();}
r8             Speed                 ()             {return _Move.Speed();}
r8             MaxSpeed              ()             {return _Move.MaxSpeed();}
ie             Speed                 (cr8 s)        {return _Move.Speed(s);}

//-----------------------------------------------------------------------------------------

bool           CanChangeAccel ()                    {return _Move.CanChangeAccel();}
r8             MinAccel              ()             {return _Move.MinAccel();}
r8             Accel                 ()             {return _Move.Accel();}
r8             MaxAccel              ()             {return _Move.MaxAccel();}
ie             Accel                 (cr8 s)        {return _Move.Accel(s);}

//-----------------------------------------------------------------------------------------

void           EnumProp();

//-----------------------------------------------------------------------------------------
};
#endif
```

A.6.7 \toolchanger\param.h

```
// Param.h: interface for the Param class.

#if !defined(AFX_Param_H__79AF9D2B_A7BC_4F04_923D_1452AF559CC1__INCLUDED_)
#    define  AFX_Param_H__79AF9D2B_A7BC_4F04_923D_1452AF559CC1__INCLUDED_

#include "IppTypeDef.h"
#include <IppErrorCodes.h>

r8             min(cr8 a, cr8 b);
r8             max(cr8 a, cr8 b);

//-----------------------------------------------------------------------------------------

class Param  {

r8             _Min;
r8             _Val;
r8             _Max;
bool           _CanChange;

//-----------------------------------------------------------------------------------------

public:        Param() {_Min=-10000;_Val=0; _Max=10000; _CanChange=Tr;}
virtual           ~Param();

//-----------------------------------------------------------------------------------------

r8             Min       ()            const   {return _Min;}
r8             Val       ()            const   {return _Val;}
r8             Max       ()            const   {return _Max;}
bool           CanChange()             const   {return _CanChange || (_Max-_Min)<=0;}
void           EnumProp ();

//-----------------------------------------------------------------------------------------
```

```
ie              Val(cr8 v)                    {
ie              errcod = ErrorSuccess;
bool            r      = CanChange();
                               if (r) {
                                r = v >= _Min && v <= _Max;
                                if (r) {
                                 _Val=v;}
                                else {
                                 _Val   = min(v,     _Max);
                                 _Val   = max(_Val, _Min);
                                 errcod = (v < _Min) ? ErrorParamTooSmall :
ErrorParamTooLarge;}}
                               else {
                                errcod = ErrorParamCannotBeChanged;}
                               return errcod;}

//-----------------------------------------------------------------------------------
private:
void            Min             (cr8 v) { _Min=v;}
void            Max             (cr8 v) { _Max=v;}
void            CanChange(cbo v) { _CanChange=v;}

//-----------------------------------------------------------------------------------
};
#endif
```

A.7 Most important of lib

A.7.1 \lib\axis.h

```
// Axis.h: interface for the Axis class.

#if !defined(AFX_Axis_H__B3DA30C7_5415_11D3_A481_0000F87ABD00__INCLUDED_)
#    define  AFX_Axis_H__B3DA30C7_5415_11D3_A481_0000F87ABD00__INCLUDED_

#include "IppTypeDef.h"

//-----------------------------------------------------------------------------------

class Axis {

//-----------------------------------------------------------------------------------

                      enum    AxisType        {Lin=1, Rot=2};

char            _Name[8];
AxisType        _Type;
r8              _MinPos;
r8              _ActPos;
r8              _MaxPos;
r8              _Pitch;
r8              _Temperature;
bool            _IsControlled;
bool            _IsHomed;

//-----------------------------------------------------------------------------------

public:         Axis();
virtual         ~Axis(){};

//-----------------------------------------------------------------------------------

i4              Type()                  const   {return _Type;}
r8              MinPos()                const   {return _MinPos;}
r8              MaxPos()                const   {return _MaxPos;}
r8              Pitch()                 const   {return _MaxPos;}
r8              Temperature()           const   {return _Temperature;}

//-----------------------------------------------------------------------------------

static
void            EnumProp();             // Name,                c*8
                                        // Type,                i4
                                        // MinPos,              r8
                                        // MaxPos,              r8
                                        // Temperature,         r8

//-----------------------------------------------------------------------------------
```

```
};
#endif
```

A.7.2 \lib\eulerw.h

```
// EulerA.h: interface for the EulerA class.

#if !defined(AFX_EulerA_H__0E096DA3_5537_11D3_84A8_0000F87ADB6B__INCLUDED_)
#    define  AFX_EulerA_H__0E096DA3_5537_11D3_84A8_0000F87ADB6B__INCLUDED_

#include "IppTop.h"

//-----------------------------------------------------------------------------------

class EulerA  {

r8              _Theta;                // Euler angel in degrees
r8              _Psi;
r8              _Phi;

//-----------------------------------------------------------------------------------

public:                EulerA();
                                       EulerA(cr8 theta, cr8 psi, cr8 phi);
                                       EulerA(cR33 &b);
virtual                   ~EulerA();
//-----------------------------------------------------------------------------------

r8              Tht() const {return _Theta;}
r8              Psi() const {return _Psi;}
r8              Phi() const {return _Phi;}

//-----------------------------------------------------------------------------------
};
//-----------------------------------------------------------------------------------
#endif
```

A.7.3 \lib\tag.h

```
// KTag.h: interface for the KTag class.

#if !defined(AFX_KTag_H__001F2611_6298_11D3_A49B_0000F87ABD00__INCLUDED_)
#    define  AFX_KTag_H__001F2611_6298_11D3_A49B_0000F87ABD00__INCLUDED_

#include <IppTypeDef.h>

//-----------------------------------------------------------------------------------

class Tag      {

static
i4              _TagCounter;                                // static tag counter
i4              _Tag;                                       // tag

//-----------------------------------------------------------------------------------

public:         Tag(ci4 i)                    {_Tag = i;}
virtual         ~Tag()                        {}

//-----------------------------------------------------------------------------------

i4              Val()                                       {return _Tag;}
i4              NewTag();                                   // create new tag *** for client
use only

//-----------------------------------------------------------------------------------
};
#endif
```

A.7.4 \lib\ipptypedef.h

```
//              This is the global type definition file

#ifndef _IppTypeDefDefined
#define _IppTypeDefDefined

//-----------------------------------------------------------------------------
```

```
typedef         unsigned      char    uc;            // define some shortcuts
typedef const   unsigned      char    cuc;           // for type definitions

typedef                                       char    ch;
typedef const                         char    cc;

typedef         unsigned      short   ui2;
typedef           signed      short   i2;
typedef const     signed      short   ci2;
typedef const   unsigned      short   cui2;

typedef           signed      int     i4;
typedef const     signed      int     ci4;

typedef               signed  int     ie;            // error codes
typedef const     signed      int     cie;

typedef const   unsigned      int     cui;
typedef         unsigned      int     ui;

typedef         unsigned      int     ich;
typedef const   unsigned      int     cich;

typedef                       double  r8;
typedef const                 double  cr8;
typedef                       float   r4;
typedef const                 float   cr4;

typedef                       bool    bo;
typedef         const         bool    cbo;

//-----------------------------------------------------------------------------

#define         Fa            false   // define boolean shortcuts
#define         Tr            true
#define         Nil           0

//-----------------------------------------------------------------------------

#endif
```

A.7.5 \lib\ippbaseclasses.h

```
//      predefined classes

#ifndef _IppBaseClassesDefined
#define _IppBaseClassesDefined

//-------------------------------------------------------------------------------------

class   String;        typedef const String   cString;       // data base object
class   Tag;           typedef const Tag      cTag;          // data base object
class   ETag;          typedef const ETag     cETag;         // data base object
class   GoToPars;      typedef const GoToPars        cGoToPars;     // data base object
class   PtMeasPars;    typedef const PtMeasPars      cPtMeasPars;

//-------------------------------------------------------------------------------------

class   V3;            typedef const V3       cV3;           // data base object
class   M33;           typedef const M33      cM33;          // data base object
class   R33;           typedef const R33      cR33;          // data base object
class   T33;           typedef const T33      cT33;          // data base object
class   T33EA;         typedef const T33EA    cT33EA;        // data base object
class   EulerA;        typedef const EulerA   cEulerA;       // data base object

//-------------------------------------------------------------------------------------

class   Axis;          typedef const Axis     cAxis;
class   Part;          typedef const Part     cPart;

//-------------------------------------------------------------------------------------

enum    ErrorSeverity; typedef const ErrorSeverity   cErrorSeverity;
enum    ErrorCode;     typedef const ErrorCode       cErrorCode;

//-------------------------------------------------------------------------------------
#endif
```